1986375-5 ✔ ACTIVE

Buchanan

TE Internal #: 1986375-5

PCB Terminal Blocks, Plug, Wire-to-Board, 5 Position, 3.81mm [.15in] Centerline, 1 Row, Side Wire Entry Angle, 30 – 14AWG Wire Size

View on TE.com >

Connectors > Terminal Blocks & Strips > PCB Terminal Blocks

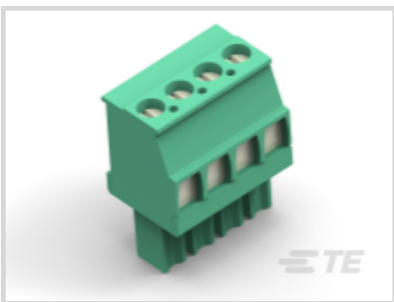
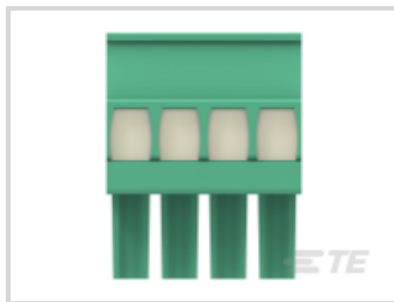
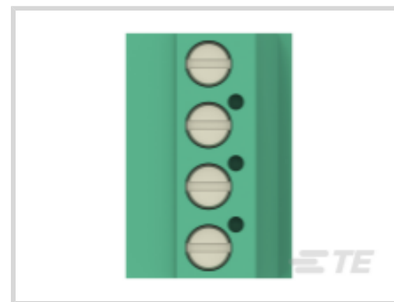

Terminal Block Connector Type: **Plug**

Connector System: **Wire-to-Board**

Number of Positions: **5**

Centerline (Pitch): **3.81 mm [.15 in]**

Number of Rows: **1**

Features

Product Type Features

Wire Protection	With
Block Type	Stacking Plug
Terminal Block Connector Type	Plug
Connector System	Wire-to-Board
Connector & Contact Terminates To	Wire & Cable

Configuration Features

Stacking Configuration	Side Stackable
Number of Positions	5
Number of Rows	1
Wire Entry Angle	Side

Electrical Characteristics

Current Rating (Max)	11 A
Voltage Rating	300 VAC

Body Features

Interlock	Without

Contact Features

Contact Mating Area Plating Material	Tin
Contact Base Material	Phosphor Bronze
Contact Current Rating (Max)	11 A

Mechanical Attachment

Screwless Terminal Block	No
Mounting Angle	Vertical
Screw Size	M2
Screw Plating Material	Nickel
Screw Material	Brass
Screw Flange	Without

Housing Features

Housing Color	Green
Housing Material	PA 66
Centerline (Pitch)	3.81 mm[.15 in]

Dimensions

Wire Size	.05 – 2 mm^2

Usage Conditions

Operating Temperature Range	-40 – 105 °C[-40 – 221 °F]

Operation/Application

Circuit Application	Power & Signal

Packaging Features

Packaging Quantity	150

Product Compliance

For compliance documentation, visit the product page on TE.com>

EU RoHS Directive 2011/65/EU	Compliant with Exemptions
EU ELV Directive 2000/53/EC	Compliant with Exemptions
China RoHS 2 Directive MIIT Order No 32, 2016	Restricted Materials Above Threshold
EU REACH Regulation (EC) No. 1907/2006	Current ECHA Candidate List: JAN 2021 (211)

	Candidate List Declared Against: JAN 2021 (211) SVHC > Threshold: Pb (.8% in Component Part) Article Safe Usage Statements: Do not eat, drink or smoke when using this product. Wash thoroughly after handling. Recycle if possible and dispose of the article by following all applicable governmental regulations relevant to your geographic location.
Halogen Content	Low Halogen - Br, Cl, F, I < 900 ppm per homogenous material. Also BFR/CFR/PVC Free
Solder Process Capability	Not applicable for solder process capability

Product Compliance Disclaimer

This information is provided based on reasonable inquiry of our suppliers and represents our current actual knowledge based on the information they provided. This information is subject to change. The part numbers that TE has identified as EU RoHS compliant have a maximum concentration of 0.1% by weight in homogenous materials for lead, hexavalent chromium, mercury, PBB, PBDE, DBP, BBP, DEHP, DIBP, and 0.01% for cadmium, or qualify for an exemption to these limits as defined in the Annexes of Directive 2011/65/EU (RoHS2). Finished electrical and electronic equipment products will be CE marked as required by Directive 2011/65/EU. Components may not be CE marked. Additionally, the part numbers that TE has identified as EU ELV compliant have a maximum concentration of 0.1% by weight in homogenous materials for lead, hexavalent chromium, and mercury, and 0.01% for cadmium, or qualify for an exemption to these limits as defined in the Annexes of Directive 2000/53/EC (ELV). Regarding the REACH Regulation, the information TE provides on SVHC in articles for this part number is based on the latest European Chemicals Agency (ECHA) 'Guidance on requirements for substances in articles' posted at this URL: https://echa.europa.eu/guidance-documents/guidance-on-reach

Compatible Parts

TE Part # 2342077-5
5POS HDR 90 DEG,HT,3.81MM PITCH, TL 1.9MM

TE Part # 2342078-5
5POS HDR ST, HT, 3.81MM PITCH, TL 1.9MM

TE Part # 284513-5
5 POS TERMI-BLOK HDR 900 POL.

Customers Also Bought

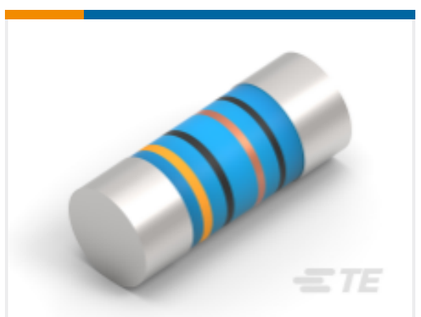

TE Part #1-2176314-1
MELF SMA_A 680R 0.1% 15PPM 0102 0.3W

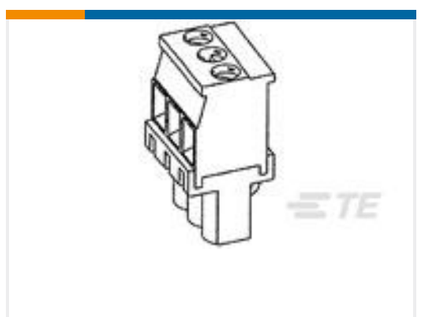

TE Part #1986374-2
Str Plug, 3.81mm, Green, RH, 2

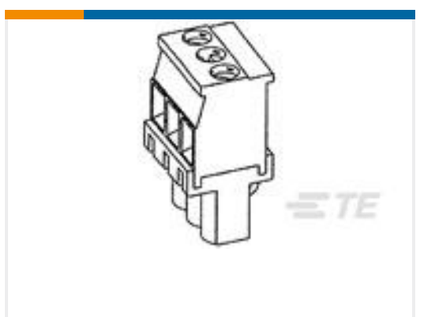

TE Part #1986374-3
Str Plug, 3.81mm, Green, RH, 3

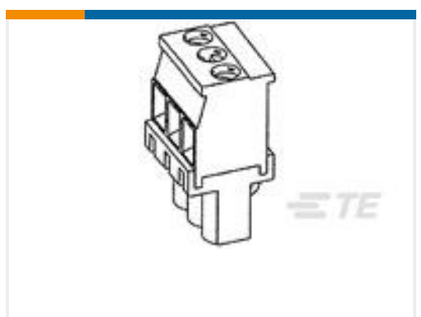

TE Part #1-1986375-2
Str Plug, 3.81mm, Green, LH, 1

TE Part #1986374-8
Str Plug, 3.81mm, Green, RH, 8

TE Part #183024-1
AMP SUPERSEAL 1.5MM, RECEPTACLE AND TAB

TE Part #YDTS20G13-35PEV001
D38999: Square Flange, 13-35 insert

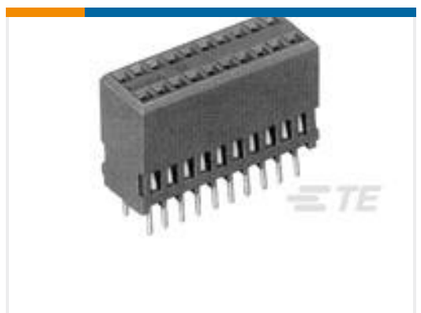

TE Part #104078-6
60 SYSTEM 50 RCPT ASSY DRST

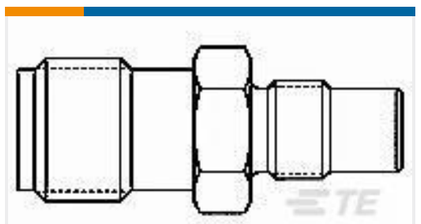

TE Part #1060266-1
5080 2240 00

TE Part #117981-000
DS-14-16-RS

Documents

Product Drawings

Str Plug, 3.81mm, Green, LH, 5

English

CAD Files

3D PDF

3D

Customer View Model

ENG_CVM_CVM_1986375-5_A.2d_dxf.zip

English

Customer View Model

ENG_CVM_CVM_1986375-5_A.3d_igs.zip

English

Customer View Model

ENG_CVM_CVM_1986375-5_A.3d_stp.zip

English

By downloading the CAD file I accept and agree to the Terms and Conditions of use.

Datasheets & Catalog Pages

LEFT_AND_RIGHT_HAND_PLUGS_3.5MM_AND_3.81MM_PITCH

English

1-1773458-1_EURO_STYLE_TERMINAL_BLOCKS_QRG

English