5650090-6 ✔ ACTIVE

AMP .050 Series

TE Internal #: 5650090-6

AMP .050 Series, Standard Edge Connectors, Board-to-Board, 60 Position, 1.27mm [.05in] Centerline, 30 Dual Positions, 2 Row, Brown Housing Color

View on TE.com >

Connectors > PCB Connectors > Card Edge Connectors > Standard Edge Connectors



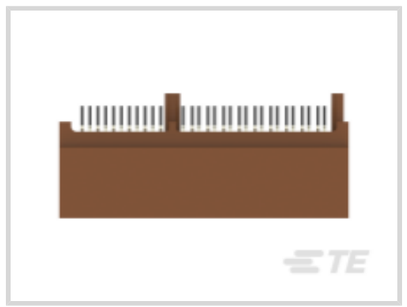



Connector System: **Board-to-Board**

Number of Positions: **60**

Centerline (Pitch): **1.27 mm [.05 in]**

Number of Dual Positions: **30**

Number of Rows: **2**

Features

Product Type Features

Connector System	Board-to-Board
Connector & Housing Type	Receptacle
Connector & Contact Terminates To	Printed Circuit Board

Configuration Features

Number of Positions	60
Number of Dual Positions	30
Number of Rows	2
Connector Contact Load Condition	Fully Loaded
PCB Mount Orientation	Vertical

Electrical Characteristics

Operating Voltage	203 VAC

Contact Features

PCB Contact Termination Area Plating Material Thickness	2.54 µm[100 µin]
Contact Type	Socket

Contact Mating Area Plating Material Thickness	.76 µm
Contact Mating Area Plating Material	Gold
PCB Contact Termination Area Plating Material Finish	Bright
Contact Underplating Material	Nickel
PCB Contact Termination Area Plating Material	Tin-Lead
Contact Base Material	Phosphor Bronze
Contact Current Rating (Max)	1 A

Termination Features

Termination Post & Tail Length	2.54 mm[.1 in]
Termination Method to Printed Circuit Board	Through Hole - Solder

Mechanical Attachment

Mating Retention	Without
Mating Alignment	With
PCB Mount Alignment	With
PCB Mount Retention	With
PCB Mount Retention Type	Boardlock
Connector Mounting Type	Board Mount

Housing Features

Centerline (Pitch)	1.27 mm[.05 in]
Housing Color	Brown
Housing Material	High Temperature Thermoplastic

Dimensions

Daughter Board Thickness	1.37 – 1.78 mm[.054 – .07 in]
Card Slot Depth	7.62 mm[.3 in]
Connector Height	13.97 mm[.55 in]

Usage Conditions

Operating Temperature Range	-55 – 85 °C[-67 – 185 °F]

Operation/Application

Circuit Application	Signal

Packaging Features

Packaging Method	Box
Packaging Quantity	35

Product Compliance

For compliance documentation, visit the product page on TE.com>

EU RoHS Directive 2011/65/EU	Compliant
EU ELV Directive 2000/53/EC	Compliant
China RoHS 2 Directive MIIT Order No 32, 2016	No Restricted Materials Above Threshold
EU REACH Regulation (EC) No. 1907/2006	Current ECHA Candidate List: JAN 2021 (211) Candidate List Declared Against: JAN 2021 (211) Does not contain REACH SVHC
Halogen Content	Not Low Halogen - contains Br or Cl > 900 ppm.
Solder Process Capability	Wave solder capable to 265°C

Product Compliance Disclaimer

This information is provided based on reasonable inquiry of our suppliers and represents our current actual knowledge based on the information they provided. This information is subject to change. The part numbers that TE has identified as EU RoHS compliant have a maximum concentration of 0.1% by weight in homogenous materials for lead, hexavalent chromium, mercury, PBB, PBDE, DBP, BBP, DEHP, DIBP, and 0.01% for cadmium, or qualify for an exemption to these limits as defined in the Annexes of Directive 2011/65/EU (RoHS2). Finished electrical and electronic equipment products will be CE marked as required by Directive 2011/65/EU. Components may not be CE marked. Additionally, the part numbers that TE has identified as EU ELV compliant have a maximum concentration of 0.1% by weight in homogenous materials for lead, hexavalent chromium, and mercury, and 0.01% for cadmium, or qualify for an exemption to these limits as defined in the Annexes of Directive 2000/53/EC (ELV). Regarding the REACH Regulation, the information TE provides on SVHC in articles for this part number is based on the latest European Chemicals Agency (ECHA) 'Guidance on requirements for substances in articles' posted at this URL: https://echa.europa.eu/guidance-documents/guidance-on-reach

Compatible Parts



TE Part # 5145154-1
CONNECTOR, 60 DUAL POSITION, .



TE Part # 5-2337939-4
PCIE GEN4 CON,SMT,164POS,30u", MYLAR,HT



TE Part # 1734774-1
PCI EXP 3.1L 36 POS WHT G/F

Also in the Series | AMP .050 Series

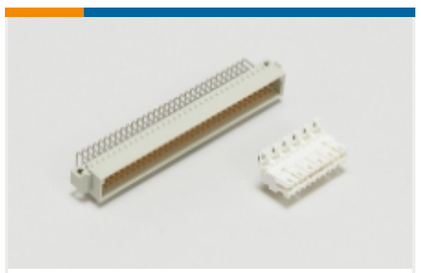

Standard Edge Connectors(16)

Customers Also Bought



TE Part #1-5745968-6
D-Sub Plug Assembly: Vertical, Shell Size 3, 2.74mm

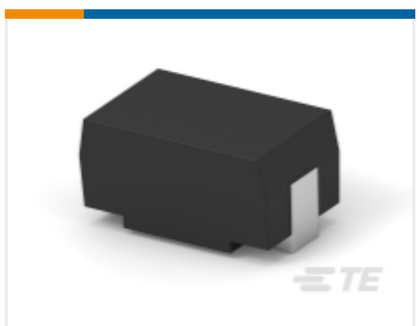

TE Part #2-1879233-5
SMD Power Resistor: 7 Watt, 200-2M Ohm



TE Part #1-316130-5
DYNAMIC 3200 HDR ASSY

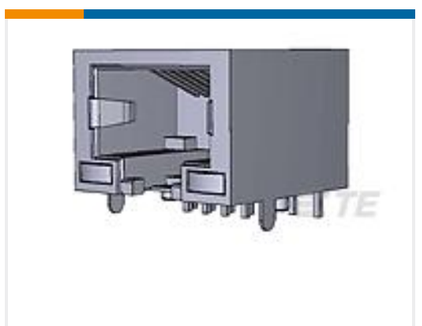

TE Part #1734324-3
RJ45,8P8C,w/ Y,G LED,shielded,dip, 30u" Au



TE Part #2-1879213-3
CPF 0402 44R2 0.1% 25PPM 1K RL



TE Part #2-1879021-5
SMW3 1R0 5%



TE Part #2-1437661-9
TC6-03-PFH=COVER w/HOLES

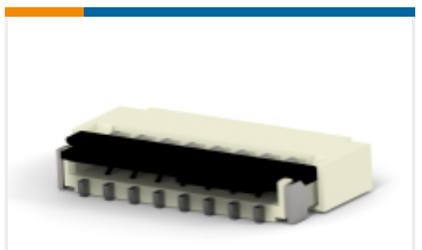

TE Part #1-2328724-5
15PIN 0.3MMP FPC CONNECTOR, FRONT FLIP

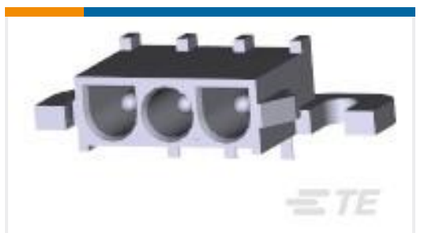

TE Part #1-350943-0
03P UMNL HDR ASSY R/A 94VO



TE Part #NB19974001
VERSAFIT-1/16-4-SP

Documents

Product Drawings

STANDARD EDGE .050 SERIES 30 DUAL ASSY

English

CAD Files

3D PDF

3D

Customer View Model

ENG_CVM_CVM_5650090-6_A.2d_dxf.zip

English

Customer View Model

ENG_CVM_CVM_5650090-6_A.3d_igs.zip

English

Customer View Model

ENG_CVM_CVM_5650090-6_A.3d_stp.zip

English

By downloading the CAD file I accept and agree to the Terms and Conditions of use.

Product Specifications

Application Specification

English

Application Specification

English

Product Environmental Compliance

TE Material Declaration

English