556137-6 ✔ ACTIVE

AMPINNERGY

TE Internal #: 556137-6

Rectangular Power Connectors, Housing, Receptacle / Plug, Wire-to-Panel / Wire-to-Wire, 1 Position, Wire & Cable, UL 94V-0

View on TE.com >

Connectors > Power Connectors > Rectangular Power > Rectangular Power Connectors



Rectangular Power Connector Type: **Housing**

Connector & Housing Type: **Plug, Receptacle**

Connector System: **Wire-to-Panel, Wire-to-Wire**

Number of Positions: **1**

Sealable: **No**

Features

Product Type Features

Rectangular Power Connector Type	Housing
Connector & Housing Type	Plug, Receptacle
Connector System	Wire-to-Panel, Wire-to-Wire
Sealable	No
Connector & Contact Terminates To	Wire & Cable

Configuration Features

Number of Positions	1
Number of Power Positions	1
Number of Signal Positions	0
Number of Rows	1

Electrical Characteristics

Operating Voltage	600 VDC

Contact Features

Contact Current Rating (Max)	55 A
Contact Retention Within Housing	With
Contact Type	Hermaphroditic
Wire Contact Termination Area Plating Material	Pre-Tin
Contact Mating Area Plating Material	Pre-Tin
Contact Mating Area Plating Material Thickness	2.54 – 2.58 µm[104 – 100 µin]

Termination Features

Termination Method to Wire & Cable	Crimp

Mechanical Attachment

Mating Alignment Type	Keyed
Mating Alignment	With
Panel Mount Feature	With
PCB Mount Retention	Without
Panel Mount Feature Type	Mounting Adapters
Connector Mounting Type	Cable Mount (Free-Hanging)
Mating Retention	Without

Housing Features

Housing Color	Blue
Housing Material	Polycarbonate

Dimensions

Wire Size	1600.53 – 12066.13 CMA
Width	9.9 mm[.39 in]
Accepts Wire Insulation Diameter Range	1.02 – 25.91 mm[.04 – 1.02 in]
Height	9.91 mm[.39 in]
Length	36.83 mm[1.45 in]

Usage Conditions

Operating Temperature Range	0 – 105 °C, 0 – 105 °C[32 – 221 °F]

Operation/Application

Circuit Application	Power

Industry Standards

CSA Rating	Certified
UL Flammability Rating	UL 94V-0
Glow Wire Rating	Standard Part - Not Glow Wire
Agency/Standard Number	E28486
Agency/Standard	CSA, UL
UL Rating	Recognized
CSA File Number	LR 7189
VDE Tested	Yes

Packaging Features

Packaging Method	Loose Piece

Product Compliance

For compliance documentation, visit the product page on TE.com>

EU RoHS Directive 2011/65/EU	Compliant
EU ELV Directive 2000/53/EC	Compliant
China RoHS 2 Directive MIIT Order No 32, 2016	No Restricted Materials Above Threshold
EU REACH Regulation (EC) No. 1907/2006	Current ECHA Candidate List: JAN 2021 (211) Candidate List Declared Against: JAN 2018 (181) SVHC > Threshold: Not Yet Reviewed
Halogen Content	Not Low Halogen - contains Br or Cl > 900 ppm.
Solder Process Capability	Not applicable for solder process capability

Product Compliance Disclaimer

This information is provided based on reasonable inquiry of our suppliers and represents our current actual knowledge based on the information they provided. This information is subject to change. The part numbers that TE has identified as EU RoHS compliant have a maximum concentration of 0.1% by weight in homogenous materials for lead, hexavalent chromium, mercury, PBB, PBDE, DBP, BBP, DEHP, DIBP, and 0.01% for cadmium, or qualify for an exemption to these limits as defined in the Annexes of Directive 2011/65/EU (RoHS2). Finished electrical and electronic equipment products will be CE marked as required by Directive 2011/65/EU. Components may not be CE marked.Additionally, the part numbers that TE has identified as EU ELV compliant have a maximum concentration of 0.1% by weight in homogenous materials for lead, hexavalent chromium, and mercury, and 0.01% for cadmium, or qualify for an exemption to these limits as defined in the Annexes of Directive 2000/53/EC (ELV). Regarding the REACH Regulations, TE's information on SVHC in articles for this part number is still based on the European Chemical Agency (ECHA) 'Guidance on requirements for substances in articles'(Version: 2, April 2011), applying the 0.1% weight on weight concentration threshold at the finished product level. TE is aware of the European Court of Justice ruling of September 10th, 2015 also known as O5A (Once An Article Always An Article) stating that, in case of 'complex object', the threshold for a SVHC must be applied to both the product as a whole and simultaneously to each of the articles forming part of its composition. TE has evaluated this ruling based on the new ECHA "Guidance on requirements for substances in articles" (June 2017, version 4.0) and will be updating its statements accordingly.

Compatible Parts



TE Part # 556137-6
HSG,AMPINNERGY WTW,1 POS,BLUE

Customers Also Bought



TE Part #556137-3
HSG,AMPINNERGY WTW,1 POS, GREEN



TE Part #1761688-9
IDC LOW PRO HDR 26P VERT LG LAT



TE Part #4-1734261-2
AMP HPI 1.25MM HEADERS



TE Part #5050935-1
Mini Spring Sockets: Closed Bottom, 3A



TE Part #YDTS20W25-29SAC001
D38999: Square Flange, 25-29 insert



TE Part #147279-9
16 MODII HDR DR SFMT B/A T&R



TE Part #1SNA206404R0500
M4/6

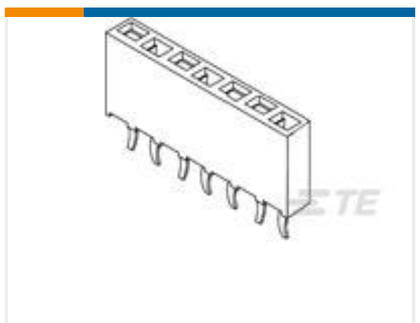

TE Part #2-215297-7
27P HV100 REC CON. TE, 7.0MM



TE Part #2266958-1
OCEAN_2.0_Applicator-S-100F160F



TE Part #2351445-3
UMINSA SW HLEV 0.74N 0.1A/30VDC NO PCB

Documents

Product Drawings

HSG,AMPINNERGY WTW,1 POS,BLUE

English

CAD Files

3D PDF

English

Customer View Model

ENG_CVM_556137-6_B.2d_dxf.zip

English

Customer View Model

ENG_CVM_556137-6_B.3d_igs.zip

English

Customer View Model

ENG_CVM_556137-6_B.3d_stp.zip

English

By downloading the CAD file I accept and agree to the Terms and Conditions of use.

Datasheets & Catalog Pages

1654742_HOUSEHOLD_APPLIANCES_RAST5

English

POWER_CONNECTORS_CATALOG_SEC02_CABLE_MOUNTED

English

Product Specifications

Application Specification

English

Application Specification

English

Instruction Sheets

AMPINNERGY Wire-to-Wire Stackable Connectors

English

Instruction Sheet (U.S.)

English

Agency Approvals

Agency Approval Document

English