5745583-1 ✔ ACTIVE

AMPLIMITE | AMPLIMITE Kit

TE Internal #: 5745583-1

AMPLIMITE Kit, D-Sub Locking & Mounting, Slide Latch Kit, Screw Length .547 in [13.89 mm]

View on TE.com >

Connectors > D-Shaped Connectors > D-Sub Accessories > Locking & Mounting

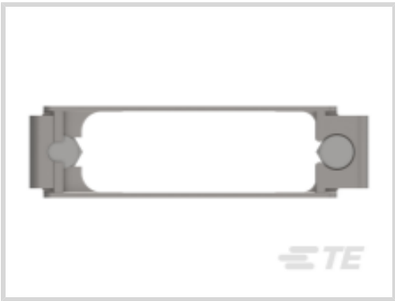

D-Shaped Connector Accessories: **Slide Latch Kit**

Screw Length: **13.89 mm [.547 in]**

Features

Product Type Features

Product Type	Accessory
Latch Type	Slide Latch
D-Shaped Connector Accessories	Slide Latch Kit

Body Features

Latch Material	Stainless Steel

Mechanical Attachment

Screw Plating Material	Zinc
Screw Material	Steel
Screw Finish	Clear Chromate
Screw & Hole Thread Size	2-56
Screw Length	13.89 mm[.547 in]

Operation/Application

For Use With	Connectors With Cable Clamp Housings

Packaging Features

Packaging Quantity	1
Packaging Method	Kit

Product Compliance

For compliance documentation, visit the product page on TE.com>

EU RoHS Directive 2011/65/EU	Compliant
EU ELV Directive 2000/53/EC	Compliant with Exemptions
China RoHS 2 Directive MIIT Order No 32, 2016	No Restricted Materials Above Threshold
EU REACH Regulation (EC) No. 1907/2006	Current ECHA Candidate List: JAN 2021 (211) Candidate List Declared Against: JAN 2021 (211) Does not contain REACH SVHC
Halogen Content	Low Halogen - Br, Cl, F, I < 900 ppm per homogenous material. Also BFR/CFR/PVC Free
Solder Process Capability	Not applicable for solder process capability

Product Compliance Disclaimer

This information is provided based on reasonable inquiry of our suppliers and represents our current actual knowledge based on the information they provided. This information is subject to change. The part numbers that TE has identified as EU RoHS compliant have a maximum concentration of 0.1% by weight in homogenous materials for lead, hexavalent chromium, mercury, PBB, PBDE, DBP, BBP, DEHP, DIBP, and 0.01% for cadmium, or qualify for an exemption to these limits as defined in the Annexes of Directive 2011/65/EU (RoHS2). Finished electrical and electronic equipment products will be CE marked as required by Directive 2011/65/EU. Components may not be CE marked. Additionally, the part numbers that TE has identified as EU ELV compliant have a maximum concentration of 0.1% by weight in homogenous materials for lead, hexavalent chromium, and mercury, and 0.01% for cadmium, or qualify for an exemption to these limits as defined in the Annexes of Directive 2000/53/EC (ELV). Regarding the REACH Regulation, the information TE provides on SVHC in articles for this part number is based on the latest European Chemicals Agency (ECHA) 'Guidance on requirements for substances in articles' posted at this URL: https://echa.europa.eu/guidance-documents/guidance-on-reach

Compatible Parts

TE Part # 5206942-1
SLIDELATCH CLIP ASSY, KIT

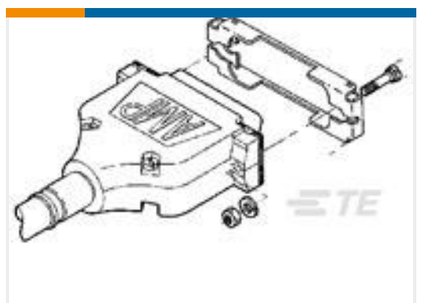

TE Part # 5745584-1
UNIV SLIDLTCH KIT SZ 3

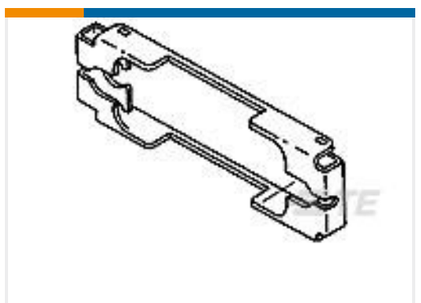

TE Part # 749027-1
SLIDELATCH UNIV REINFORCED

TE Part # 5745579-3
SLIDE, ZINC PLATED

Also in the Series | AMPLIMITE Kit

D-Sub Backshells & Clamps(136)

D-Sub Contact Accessories(1)

D-Sub Covers(3)

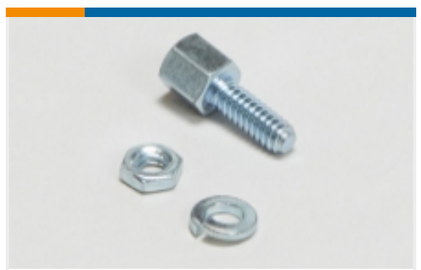

D-Sub Locking & Mounting(122)

Customers Also Bought

TE Part #208720-1
CMC SERIES 1

TE Part #2-320575-1
PIDG RING TONGUE TERMINALS

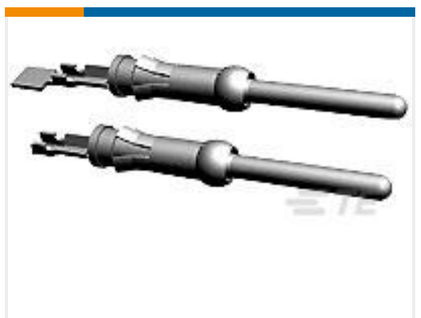

TE Part #1-66107-0
III+ PIN,26-24,30AU/FL,SMPACK

TE Part #1218440-1
AMPLIMITE,ASY,PLUG,RT ANG,109,1

TE Part #207438-3
CONTACT,PIN

TE Part #2-36451-1
TERMINAL,SOLIS R 12-10 10

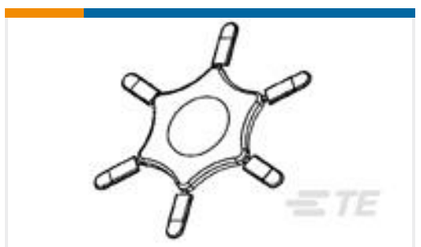

TE Part #282969-1
PLZN.KEY,TERMI-BLOK PLUG

TE Part #ZPF000000000107200
787-8055-11M

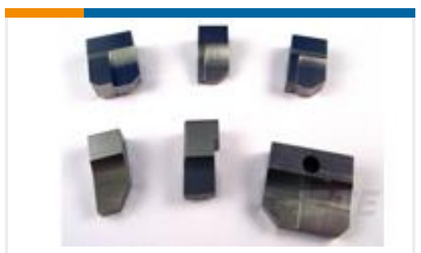

TE Part #3-662183-1
ANVIL, COMBINATION .055

Documents

Product Drawings

UNIV SLIDLTCH KIT SZ 2

English

CAD Files

3D PDF

3D

Customer View Model

ENG_CVM_CVM_5745583-1_O.2d_dxf.zip

English

Customer View Model

ENG_CVM_CVM_5745583-1_O.3d_igs.zip

English

Customer View Model

ENG_CVM_CVM_5745583-1_O.3d_stp.zip

English

By downloading the CAD file I accept and agree to the Terms and Conditions of use.

Datasheets & Catalog Pages

AMPLIMITE Subminiature D Connectors - Cable Connectors

English

AMPLIMITE Cable Connectors and Shielding Hardware Kits QRG

English

Product Specifications

Application Specification

English

Product Environmental Compliance

TE Material Declaration

English

Instruction Sheets

Instruction Sheet (U.S.)

English