1-104503-5 ✔ ACTIVE

AMPMODU | AMPMODU MTE

TE Internal #: 1-104503-5

AMPMODU MTE, Housing, Plug, Wire-to-Board, 16 Position, 2.54 mm [.1in] Centerline, Insulation Displacement Crimp (IDC) / Crimp, 1 Row

View on TE.com >

Connectors > PCB Connectors > Wire-to-Board Connectors > Wire-to-Board Connector Assemblies & Housings



Connector Product Type: **Housing**

Connector & Housing Type: **Plug**

Connector System: **Wire-to-Board**

Number of Positions: **16**

Centerline (Pitch): **2.54 mm [.1 in]**

Features

Product Type Features

Connector Product Type	Housing
Connector & Housing Type	Plug
Connector System	Wire-to-Board
Sealable	No
Connector & Contact Terminates To	Wire & Cable

Configuration Features

Number of Positions	16
Number of Rows	1

Electrical Characteristics

Dielectric Withstanding Voltage (Max)	600 VAC
Insulation Resistance	5000 MΩ
Operating Voltage	267 V

Contact Features

Contact Layout	Inline
Contact Type	Pin
Contact Base Material	Phosphor Bronze
Contact Current Rating (Max)	3 A

Termination Features

Termination Method to Wire & Cable	Crimp, Insulation Displacement Crimp (IDC)

Mechanical Attachment

Strain Relief	Without
Panel Mount Feature	Without
PCB Mount Retention	Without
Mating Retention	Without
Connector Mounting Type	Cable Mount (Free-Hanging)

Housing Features

Housing Entry Configuration	Both Ends Closed
Housing Material	Thermoplastic
Centerline (Pitch)	2.54 mm[.1 in]
Housing Color	Black

Dimensions

Connector Length	40.58 mm
Connector Height	2.48 mm
Wire Size	.05 – .3 mm^2
Row-to-Row Spacing	2.54 mm[.1 in]

Usage Conditions

Operating Temperature Range	-65 – 105 °C[-85 – 221 °F]

Operation/Application

Circuit Application	Signal

Industry Standards

UL Flammability Rating	UL 94V-0

Packaging Features

Packaging Quantity	1
Packaging Method	Package

Other

Comment	Refer to AMPMODU contacts for crimp snap-in replacement receptacle or pin contacts.

Product Compliance

For compliance documentation, visit the product page on TE.com>

EU RoHS Directive 2011/65/EU	Compliant
EU ELV Directive 2000/53/EC	Compliant
China RoHS 2 Directive MIIT Order No 32, 2016	No Restricted Materials Above Threshold
EU REACH Regulation (EC) No. 1907/2006	Current ECHA Candidate List: JAN 2021 (211) Candidate List Declared Against: JAN 2021 (211) Does not contain REACH SVHC
Halogen Content	Not Low Halogen - contains Br or Cl > 900 ppm.
Solder Process Capability	Not applicable for solder process capability

Product Compliance Disclaimer

This information is provided based on reasonable inquiry of our suppliers and represents our current actual knowledge based on the information they provided. This information is subject to change. The part numbers that TE has identified as EU RoHS compliant have a maximum concentration of 0.1% by weight in homogenous materials for lead, hexavalent chromium, mercury, PBB, PBDE, DBP, BBP, DEHP, DIBP, and 0.01% for cadmium, or qualify for an exemption to these limits as defined in the Annexes of Directive 2011/65/EU (RoHS2). Finished electrical and electronic equipment products will be CE marked as required by Directive 2011/65/EU. Components may not be CE marked. Additionally, the part numbers that TE has identified as EU ELV compliant have a maximum concentration of 0.1% by weight in homogenous materials for lead, hexavalent chromium, and mercury, and 0.01% for cadmium, or qualify for an exemption to these limits as defined in the Annexes of Directive 2000/53/EC (ELV). Regarding the REACH Regulation, the information TE provides on SVHC in articles for this part number is based on the latest European Chemicals Agency (ECHA) 'Guidance on requirements for substances in articles' posted at this URL: https://echa.europa.eu/guidance-documents/guidance-on-reach

Compatible Parts

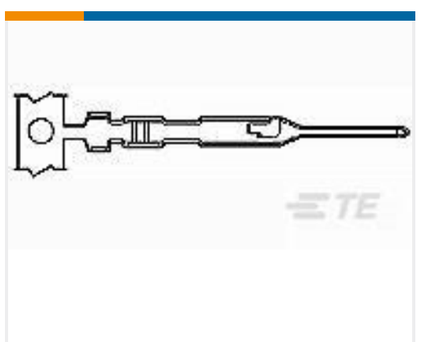

TE Part # 5-104506-4
MTE PIN 28-32 AWG PLTD

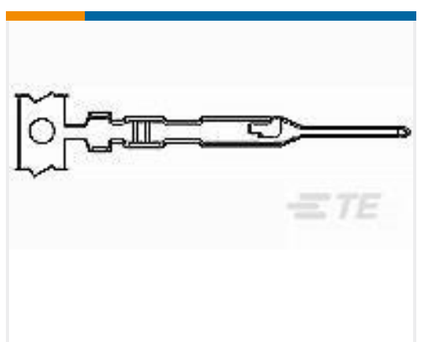

TE Part # 5-104505-4
MTE PIN 22-26 AWG PLTD

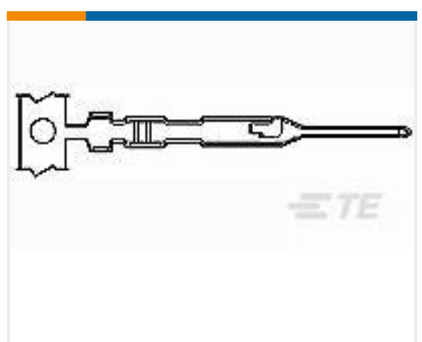

TE Part # 5-104505-2
MTE PIN 22-26 AWG PLTD

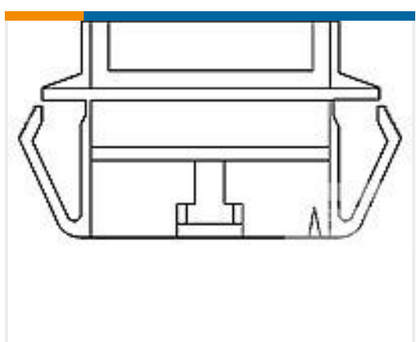

TE Part # 1-103682-5
16 MTE PANEL MOUNT SR



TE Part # 6-103734-5
16 MTE RCPT SR LATCH .100CL

Also in the Series | AMPMODU MTE

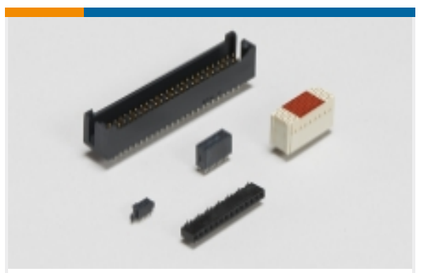

Board-to-Board Headers & Receptacles(23)



Insertion & Extraction Tools(2)



PCB Connector Shrouds(40)



Ribbon Connector Accessories(1)

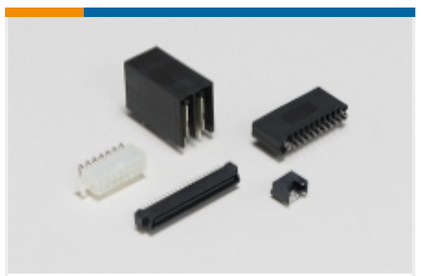

Standard Rectangular Connectors(2)



Wire-to-Board Connector Assemblies & Housings(585)



Wire-to-Board Connector Contacts(32)

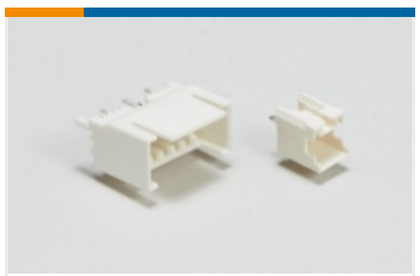

Wire-to-Board Headers & Receptacles (740)

Customers Also Bought

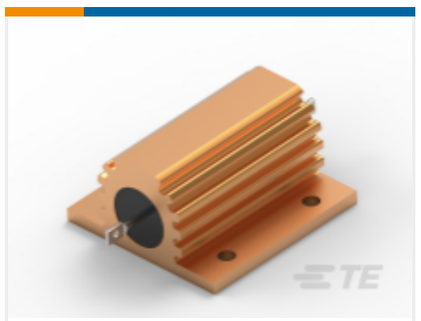

TE Part #1-1625995-3

Power Resistors: Aluminum Housed, HSA

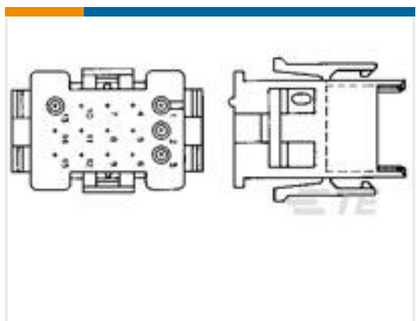

TE Part #1-640513-0

15P MR II CAP HSG V0 RED



TE Part #1-104257-5

16 MTE RCPT HSG SR LATCH .100



TE Part #172164-1

1 CIR UNIV M-N-L PLUG



TE Part #1658656-1

D-Sub Crimp Recpt Signal 15 Posn, Socket Size 20, Shell Size 2



TE Part #2-320568-2

PIDG RING TONGUE TERMINALS



TE Part #E56137-000

SP SELF LAMINATING POLYESTER LABELS



TE Part #1558665-1

PCB Power Relay: 30 amp, Monostable DC



TE Part #1622743-1

LR2 1% 39R



TE Part #1-640415-0

UMNL KEYING PLUG V0

Documents

Product Drawings

16 MTE PIN HSG SR RIB .100CL

English

CAD Files

Customer View Model

ENG_CVM_1-104503-5_G.3d_igs.zip

English

3D PDF

English

Customer View Model

ENG_CVM_1-104503-5_G.3d_stp.zip

English

Customer View Model

ENG_CVM_1-104503-5_G.2d_dxf.zip

English

By downloading the CAD file I accept and agree to the **Terms and Conditions** of use.

Datasheets & Catalog Pages

AMPMODU_INTERCONNECTION_SYSTEM_SECTION5_CONT

English

AMP MODU MTE Section of Catalog 1307819

English

AMPMODU MTE INTERCONNECT SYSTEM

English

Product Specifications

Application Specification

English

Product Environmental Compliance

TE Material Declaration

English

Agency Approvals

UL Report

English