1241050-7 ✔ ACTIVE

AMPMODU | AMPMODU Headers

TE Internal #: 1241050-7

AMPMODU Headers, PCB Mount Header, Vertical, Board-to-Board, 14 Position, 2.54mm [.1in] Centerline, Breakaway, Gold, Printed Circuit Board

View on TE.com >

Connectors > PCB Connectors > Board-to-Board Connectors > Board-to-Board Headers & Receptacles

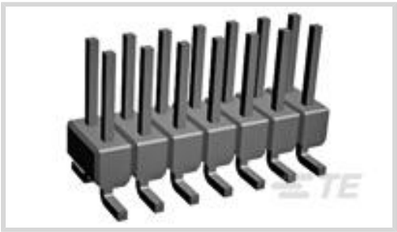

PCB Connector Assembly Type: **PCB Mount Header**

PCB Mount Orientation: **Vertical**

Connector System: **Board-to-Board**

Number of Positions: **14**

Centerline (Pitch): **2.54 mm [.1 in]**

Features

Product Type Features

PCB Connector Assembly Type	PCB Mount Header
Connector System	Board-to-Board
Header Type	Breakaway
Sealable	No
Connector & Contact Terminates To	Printed Circuit Board

Configuration Features

Number of Rows	2
Connector Contact Load Condition	Fully Loaded
PCB Mount Orientation	Vertical
Number of Positions	14
Board-to-Board Configuration	Parallel

Contact Features

Mating Square Post Dimension	.64 mm[.025 in]
PCB Contact Termination Area Plating Material Thickness	3 µm
Contact Shape & Form	Square
Contact Underplating Material	Nickel
PCB Contact Termination Area Plating Material	Tin
Contact Base Material	CuZn, Phosphor Bronze

Contact Mating Area Plating Material	Gold
Contact Mating Area Plating Material Thickness	.8 µm[31.5 µin]
Contact Type	Pin
Contact Current Rating (Max)	5 A

Termination Features

Square Termination Post & Tail Dimension	.64 mm[.025 in]
Termination Method to Printed Circuit Board	Surface Mount

Mechanical Attachment

Mating Alignment	Without
PCB Mount Retention	Without
PCB Mount Alignment	Without
Connector Mounting Type	Board Mount

Housing Features

Centerline (Pitch)	2.54 mm[.1 in]
Housing Color	Black
Housing Material	PCT GF

Dimensions

Row-to-Row Spacing	2.54 mm[.1 in]
PCB Thickness (Recommended)	1.6 mm[.063 in]

Usage Conditions

Housing Temperature Rating	Standard
Operating Temperature Range	-65 – 105 °C[-85 – 221 °F]

Operation/Application

Circuit Application	Signal

Industry Standards

UL Flammability Rating	UL 94V-0

Packaging Features

Packaging Quantity	350
Packaging Method	Reel

Product Compliance

For compliance documentation, visit the product page on TE.com>

EU RoHS Directive 2011/65/EU	Compliant
EU ELV Directive 2000/53/EC	Compliant
China RoHS 2 Directive MIIT Order No 32, 2016	No Restricted Materials Above Threshold
EU REACH Regulation (EC) No. 1907/2006	Current ECHA Candidate List: JAN 2021 (211) Candidate List Declared Against: JAN 2021 (211) Does not contain REACH SVHC
Halogen Content	Not Low Halogen - contains Br or Cl > 900 ppm.
Solder Process Capability	Reflow solder capable to 260°C

Product Compliance Disclaimer

This information is provided based on reasonable inquiry of our suppliers and represents our current actual knowledge based on the information they provided. This information is subject to change. The part numbers that TE has identified as EU RoHS compliant have a maximum concentration of 0.1% by weight in homogenous materials for lead, hexavalent chromium, mercury, PBB, PBDE, DBP, BBP, DEHP, DIBP, and 0.01% for cadmium, or qualify for an exemption to these limits as defined in the Annexes of Directive 2011/65/EU (RoHS2). Finished electrical and electronic equipment products will be CE marked as required by Directive 2011/65/EU. Components may not be CE marked. Additionally, the part numbers that TE has identified as EU ELV compliant have a maximum concentration of 0.1% by weight in homogenous materials for lead, hexavalent chromium, and mercury, and 0.01% for cadmium, or qualify for an exemption to these limits as defined in the Annexes of Directive 2000/53/EC (ELV). Regarding the REACH Regulation, the information TE provides on SVHC in articles for this part number is based on the latest European Chemicals Agency (ECHA) 'Guidance on requirements for substances in articles' posted at this URL: https://echa.europa.eu/guidance-documents/guidance-on-reach

Compatible Parts

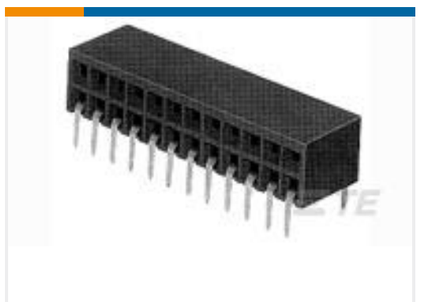

TE Part # 216604-7
2X 7P HV190FEDERLEI

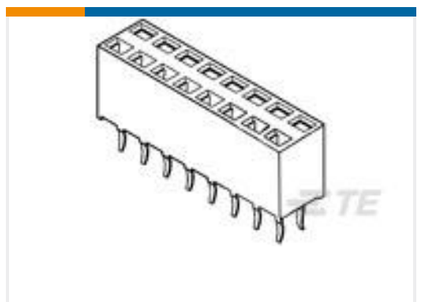

TE Part # 215307-7
2X7P HV100 REC CON. TE, 7.0MM

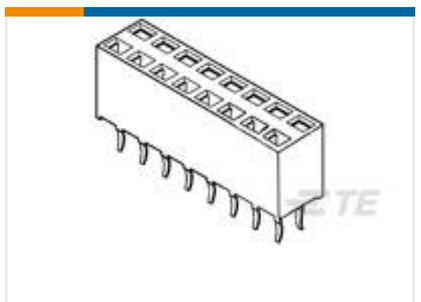

TE Part # 215309-7
2X7P HV100 REC CON. TE, 8.5MM

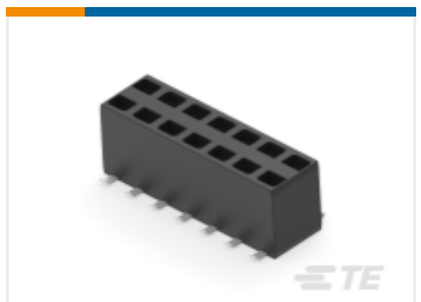

TE Part # 969973-7
2x7P HV100 REC. CON, SMD, GOLD, BLISTER

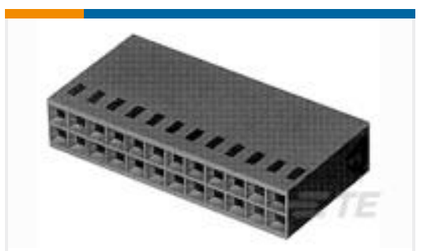

TE Part # 925367-7
MOD 4 REC.HSG 2X07P

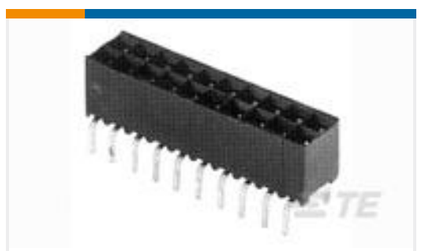

TE Part # 829264-7
2X 7P HV100 REC CON.B/TE, 6.2,NO KINK

Also in the Series | AMPMODU Headers

Automotive Headers(10)

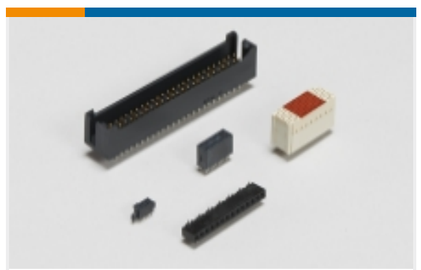

Board-to-Board Headers & Receptacles(7077)

PCB Connector Mounting(1)

PCB Connector Shrouds(1)

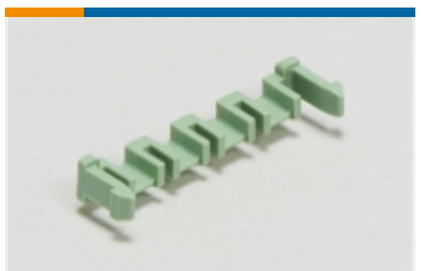

PCB Latches, Locks & Retainers(2)

Wire-to-Board Connector Assemblies & Housings(5)

Wire-to-Board Connector Contacts(66)

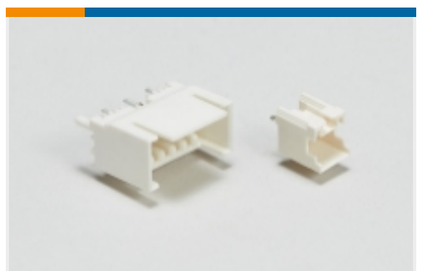

Wire-to-Board Headers & Receptacles (79)

Customers Also Bought

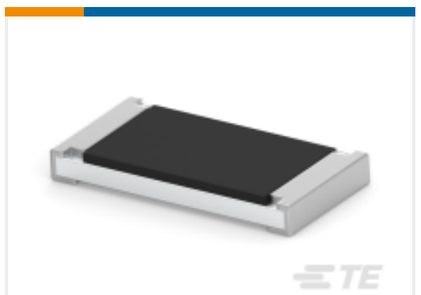

TE Part #1-1622825-6
Thick Film Resistor: Current Sense

TE Part #1-1337494-0
BNC R/A Shld PCB Skt 50Ohm Nickel Pltd

TE Part #1-1393560-8
V42254A 122V 1=SUB D BOLZENSA

TE Part #1241050-3
2x3P MOD II BREAK AWAY HDR,SMD, BLISTER

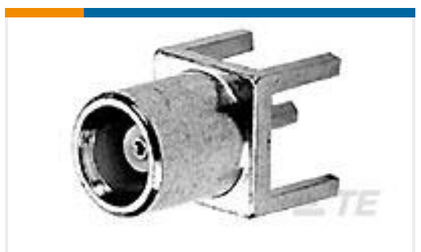

TE Part #1-1337581-0
MCX Str PCB Skt 50Ohm Gold Pltd

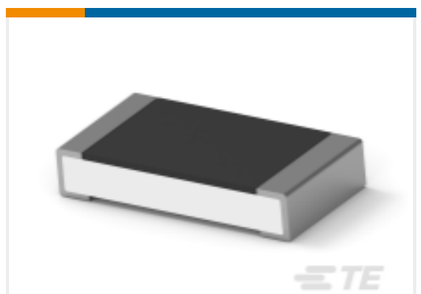

TE Part #1-2176389-1
RQ 1206 137R 0.1% 10PPM 5K RL

TE Part #1-1623714-2
FCB4 220R 5% HP

TE Part #1-1625878-3
FRN25 5% 4R7

TE Part #1241050-5
2x5P MOD II BREAK AWAY HDR,SMD, BLISTER

TE Part #928205-5
5P TELFIX BU-GEH

Documents

Product Drawings

2x7P MOD II BREAK AWAY HDR,SMD, BLISTER

English

CAD Files

3D PDF

3D

Customer View Model

ENG_CVM_CVM_1241050-7_B.2d_dxf.zip

English

Customer View Model

ENG_CVM_CVM_1241050-7_B.3d_igs.zip

English

Customer View Model

ENG_CVM_CVM_1241050-7_B.3d_stp.zip

English

By downloading the CAD file I accept and agree to the Terms and Conditions of use.

Product Environmental Compliance

MD_1241050-7_121120152359_dmtec

English

MD_1241050-7_121120152359_dmtec

English