144095-2 ✔ ACTIVE

AMPMODU | AMPMODU IV/V

TE Internal #: 144095-2

AMPMODU IV/V, Housing, Receptacle, 6 Position, 2.54mm [.1in] Centerline, Crimp, 2 Row, Row-to-Row Spacing .1 in [2.54 mm], Black Housing Color

View on TE.com >

Connectors > PCB Connectors > Wire-to-Board Connectors > Wire-to-Board Connector Assemblies & Housings

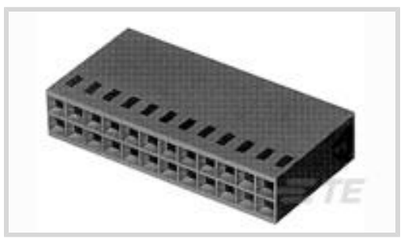

Connector Product Type: **Housing**

Connector & Housing Type: **Receptacle**

Number of Positions: **6**

Centerline (Pitch): **2.54 mm [.1 in]**

Termination Method to Wire & Cable: **Crimp**

Features

Product Type Features

Connector Product Type	Housing
Connector & Housing Type	Receptacle
Connector & Contact Terminates To	Wire & Cable

Configuration Features

Number of Positions	6
Number of Rows	2

Electrical Characteristics

Dielectric Withstanding Voltage (Max)	750 VAC
Insulation Resistance	5000 MΩ
Operating Voltage	250 VAC

Contact Features

Contact Type	Socket

Termination Features

Termination Method to Wire & Cable	Crimp

Mechanical Attachment

Strain Relief	Without
Panel Mount Feature	Without
PCB Mount Retention	Without

Mating Retention Type	Latch
Mating Retention	With

Housing Features

Housing Entry Configuration	Both Ends Closed
Housing Material	Polyamide - GF
Centerline (Pitch)	2.54 mm[.1 in]
Housing Color	Black

Dimensions

Connector Length	13.9 mm
Connector Height	18 mm
Row-to-Row Spacing	2.54 mm[.1 in]

Usage Conditions

Operating Temperature Range	-65 – 105 °C

Packaging Features

Packaging Quantity	1000
Packaging Method	Box

Product Compliance

For compliance documentation, visit the product page on TE.com>

EU RoHS Directive 2011/65/EU	Compliant
EU ELV Directive 2000/53/EC	Compliant
China RoHS 2 Directive MIIT Order No 32, 2016	No Restricted Materials Above Threshold
EU REACH Regulation (EC) No. 1907/2006	Current ECHA Candidate List: JAN 2021 (211) Candidate List Declared Against: JAN 2021 (211) Does not contain REACH SVHC
Halogen Content	Low Halogen - Br, Cl, F, I < 900 ppm per homogenous material. Also BFR/CFR/PVC Free
Solder Process Capability	Not applicable for solder process capability

Product Compliance Disclaimer

This information is provided based on reasonable inquiry of our suppliers and represents our current actual knowledge based on the information they provided. This information is subject to change. The part numbers that TE has identified as EU RoHS compliant have a maximum concentration of 0.1% by weight in homogenous materials for lead, hexavalent

chromium, mercury, PBB, PBDE, DBP, BBP, DEHP, DIBP, and 0.01% for cadmium, or qualify for an exemption to these limits as defined in the Annexes of Directive 2011/65/EU (RoHS2). Finished electrical and electronic equipment products will be CE marked as required by Directive 2011/65/EU. Components may not be CE marked. Additionally, the part numbers that TE has identified as EU ELV compliant have a maximum concentration of 0.1% by weight in homogenous materials for lead, hexavalent chromium, and mercury, and 0.01% for cadmium, or qualify for an exemption to these limits as defined in the Annexes of Directive 2000/53/EC (ELV). Regarding the REACH Regulation, the information TE provides on SVHC in articles for this part number is based on the latest European Chemicals Agency (ECHA) 'Guidance on requirements for substances in articles' posted at this URL: https://echa.europa.eu/guidance-documents/guidance-on-reach

Compatible Parts

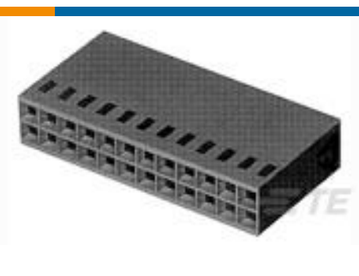

TE Part # 144095-1
HOUSING MODU IV 2X3 P

Also in the Series | AMPMODU IV/V



Automotive Headers(2)



Automotive Housings(4)

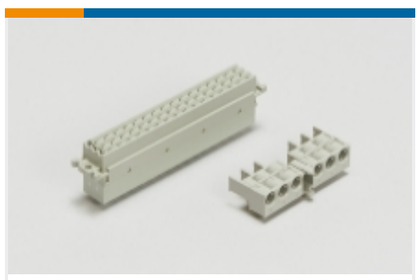

Backplane Connector Housings(1)



Board-to-Board Connector Contacts(6)

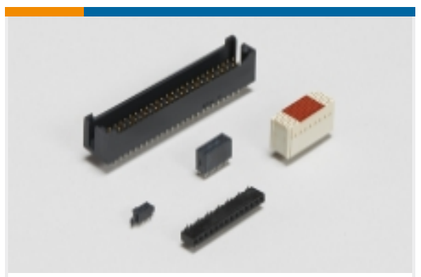

Board-to-Board Headers & Receptacles(937)



Insertion & Extraction Tools(4)

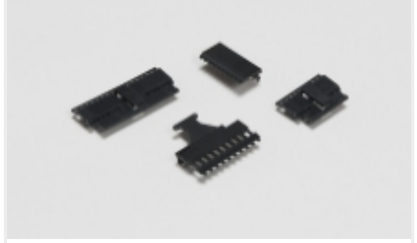

PCB Connector Covers(18)

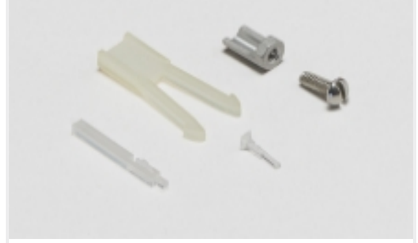

PCB Connector Keying(6)



PCB Connector Mounting(1)

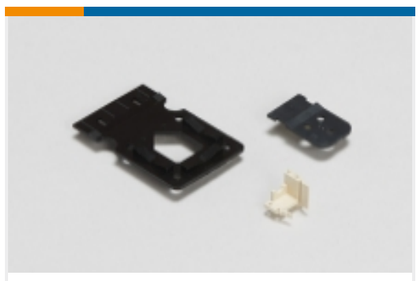

PCB Connector Strain Relief(3)

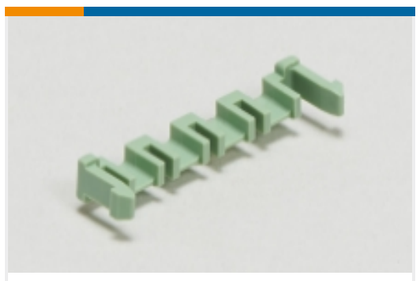

PCB Latches, Locks & Retainers(9)



Rectangular Connector Housings(5)



Standard Rectangular Connectors(8)



Wire-to-Board Connector Assemblies & Housings(472)



Wire-to-Board Connector Contacts (328)

Customers Also Bought



TE Part #1658543-1
D-Sub Conn Contacts: Socket, Phosphor Bronze, Signal, Size 20

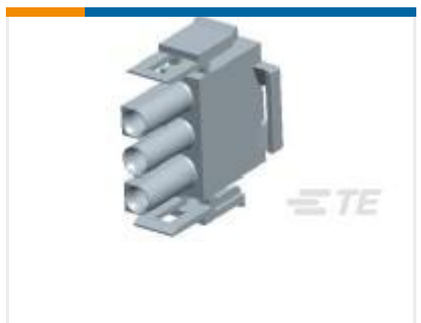

TE Part #1241809-2
UMNL ST-SOCK,A-P 3P

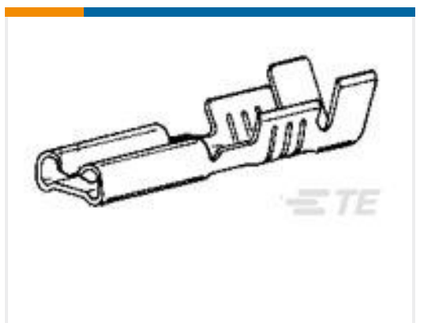

TE Part #140717-2
110 FASTON,REC.,22-18 AWG,PTBR



TE Part #DTP04-2P-C015
DEUTSCH DTP HOUSINGS



TE Part #160101-9
RING TONGUE 20-16 AWG 0.0253 NPBR



TE Part #144684-1
COVER MODU IV 2X3 POS.

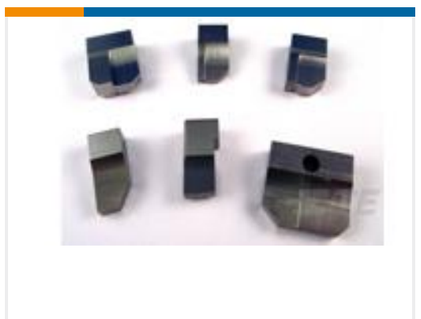

TE Part #1333205-6
ANVIL, COMBINATION (.090)

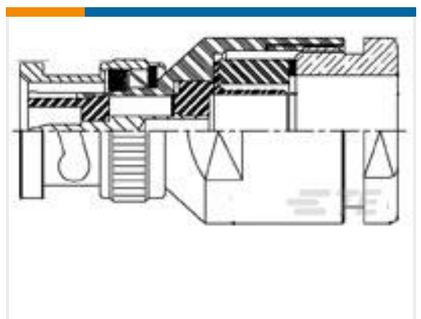

TE Part #1-1478403-0
BNC Str Plg PS 75Ohm Silver RG179B /U, 18



TE Part #1-690569-1
PLATE, SHEAR, FRONT



TE Part #1-626064-2
FF 110 HOUSING REC NAT PA6.6 V-0

Documents

Product Drawings

HOUSING MODU IV 2X3 P NEUTRAL

French

CAD Files

3D PDF

English

Customer View Model

ENG_CVM_144095-2_E.3d_igs.zip

English

Customer View Model

ENG_CVM_144095-2_E.3d_stp.zip

English

Customer View Model

ENG_CVM_144095-2_E.2d_dxf.zip

English

By downloading the CAD file I accept and agree to the **Terms and Conditions** of use.

Product Specifications

Product Specification

English

Product Environmental Compliance

Product Compliance

English

Product Compliance

English