1-583717-3 ✔ ACTIVE

AMP | AMP Twin-Leaf

TE Internal #: 1-583717-3

AMP Twin-Leaf, Housing, Receptacle, Wire-to-Board, 30 Position, 2.54mm [.1in] Centerline, Crimp, 2 Row, Black Housing Color, Printed Circuit Board

View on TE.com >

Connectors > PCB Connectors > Wire-to-Board Connectors > Wire-to-Board Connector Assemblies & Housings

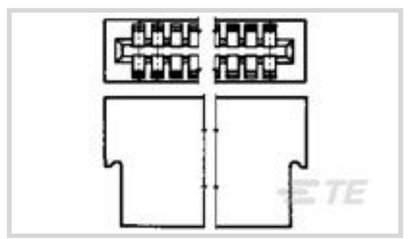

Connector Product Type: **Housing**

Connector & Housing Type: **Receptacle**

Connector System: **Wire-to-Board**

Number of Positions: **30**

Centerline (Pitch): **2.54 mm [.1 in]**

Features

Product Type Features

Connector Product Type	Housing
Connector & Housing Type	Receptacle
Connector System	Wire-to-Board
Connector & Contact Terminates To	Printed Circuit Board

Configuration Features

Number of Dual Positions	30
Number of Positions	30
Number of Rows	2

Contact Features

Contact Current Rating (Max)	5 A

Termination Features

Termination Method to Wire & Cable	Crimp

Mechanical Attachment

Strain Relief	Without
PCB Mount Retention	Without
Mating Retention	Without
Connector Mounting Type	Board Mount

Housing Features

Housing Material	Polyester GF
Centerline (Pitch)	2.54 mm[.1 in]
Housing Color	Black

Dimensions

	.75 in

Usage Conditions

Operating Temperature Range	-55 – 105 °C[-67 – 221 °F]

Operation/Application

Circuit Application	Power & Signal

Industry Standards

Glow Wire Rating	Standard Part - Not Glow Wire
UL Flammability Rating	UL 94V-0

Packaging Features

Packaging Quantity	1
Packaging Method	Package

Product Compliance

For compliance documentation, visit the product page on TE.com>

EU RoHS Directive 2011/65/EU	Compliant
EU ELV Directive 2000/53/EC	Compliant
China RoHS 2 Directive MIIT Order No 32, 2016	No Restricted Materials Above Threshold
EU REACH Regulation (EC) No. 1907/2006	Current ECHA Candidate List: JAN 2021 (211) Candidate List Declared Against: JAN 2020 (205) SVHC > Threshold: Not Yet Reviewed
Halogen Content	Not Low Halogen - contains Br or Cl > 900 ppm.
Solder Process Capability	Not applicable for solder process capability

Product Compliance Disclaimer

This information is provided based on reasonable inquiry of our suppliers and represents our current actual knowledge based on the information they provided. This information is subject to change. The part numbers that TE has identified as EU RoHS compliant have a maximum concentration of 0.1% by weight in homogenous materials for lead, hexavalent chromium, mercury, PBB, PBDE, DBP, BBP, DEHP, DIBP, and 0.01% for cadmium, or qualify for an exemption to these limits as defined in the Annexes of Directive 2011/65/EU (RoHS2). Finished electrical and electronic equipment products

will be CE marked as required by Directive 2011/65/EU. Components may not be CE marked. Additionally, the part numbers that TE has identified as EU ELV compliant have a maximum concentration of 0.1% by weight in homogenous materials for lead, hexavalent chromium, and mercury, and 0.01% for cadmium, or qualify for an exemption to these limits as defined in the Annexes of Directive 2000/53/EC (ELV). Regarding the REACH Regulation, the information TE provides on SVHC in articles for this part number is based on the latest European Chemicals Agency (ECHA) 'Guidance on requirements for substances in articles' posted at this URL: https://echa.europa.eu/guidance-documents/guidance-on-reach

Compatible Parts

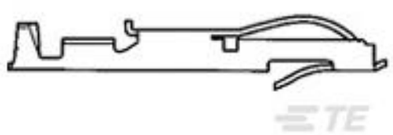

TE Part # 5-583649-3
CONT.CRP.SNAP TW.LF.STRIP



TE Part # 583879-1
CONTACT CSTL 15AU 50SN/PB

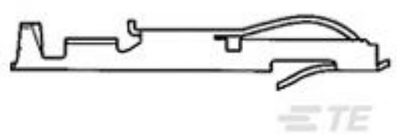

TE Part # 583649-3
CONT.CRP.SNAP TW.LF.STRIP



TE Part # 583854-3
TWIN LF SOLD EYE CONTACT



TE Part # 1-583649-1
TWIN LEAF STRIP TERM



TE Part # 1-583884-5
CONTACT CSTL 15AU 50SN/PB



TE Part # 1-881099-3
TWIN LEAF CONTACT

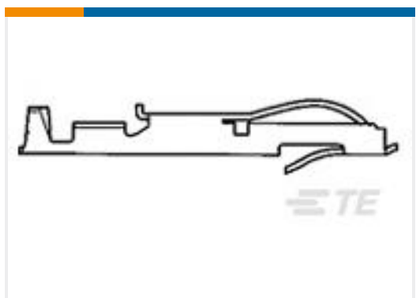

TE Part # 5-583649-2
CONT.CRP.SNAP TW.LF.STRIP

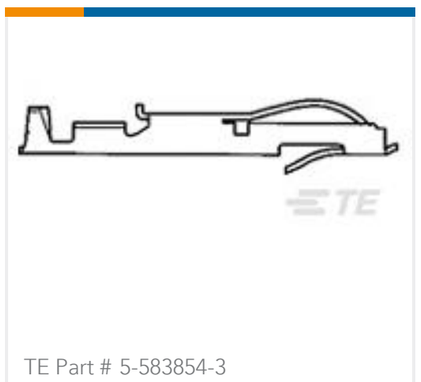

TE Part # 5-583854-3
TWIN LF SOLD EYE CONTACT



TE Part # 5-583857-1
CONT TW-LF CRP SANP

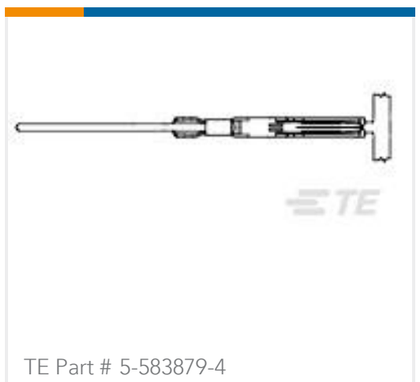

TE Part # 5-583879-4
CONTACT CSTL 15AU 50SN/PB

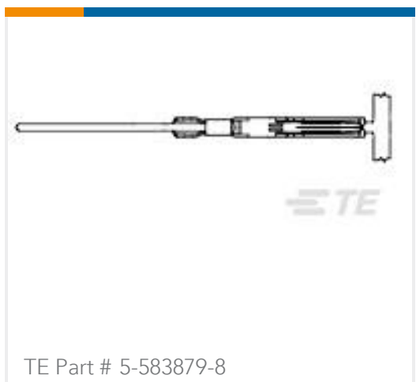

TE Part # 5-583879-8
CONTACT CSTL 15AU 50SN/PB



TE Part # 5-583879-9
CONTACT CSTL 15AU 50SN/PB

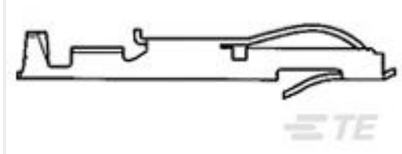

TE Part # 531477-2
CONT.MINI LEAF STRIP

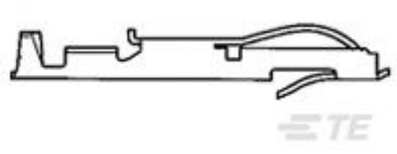

TE Part # 531477-4
CONT.MINI-LEAF STRIP



TE Part # 583274-3
KEYING PLUG

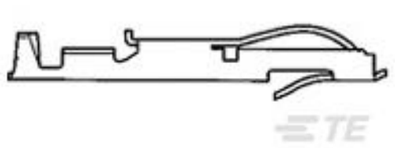

TE Part # 583649-2
CONT.CRP.SNAP TW.LF.STRIP

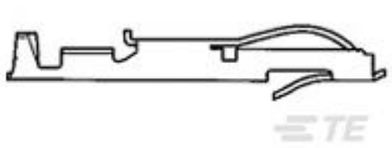

TE Part # 583649-6
TW LF CONTACT LP OF 583649-3



TE Part # 583857-1
CONT TW-LF CRP SANP



TE Part # 583879-4
CONTACT CSTL 15AU 50SN/PB

Also in the Series | AMP Twin-Leaf



Insertion & Extraction Tools(1)



Wire-to-Board Connector Assemblies & Housings(27)



Wire-to-Board Connector Contacts(16)

Customers Also Bought



TE Part #1-6609028-2
CORCOM K SERIES SINGLE PHASE FILTERS



TE Part #1757826-5
AMPLIMITE,ASY,RCPT,FB,90,ZN,5



TE Part #5-2301996-1
RJ45 JACK INT.MAG. 10/100 1X2 INV.



TE Part #1986716-7
Flush Mt Plug Spring Conn 7P 3.50mm



TE Part #1703073-1
2POS MT-EDGE HOUSING



TE Part #1757821-4
AMPLIMITE,ASY,PLUG,FB,109,ZN,4



TE Part #1-2364570-9
AVH19 FLT SS MT RNG BLU 24V16A



TE Part #2364698-1
AVH25 FLT SS MT NO LED 16A



TE Part #BGC880N0000052A000
917 RECEPTACLE, ANGLED, ROTATABLE

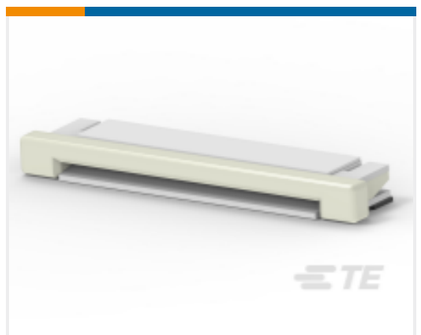

TE Part #1775333-9
0.5mm FPC Connectors

Documents

Product Drawings

TW LEAF CRP HSG. 30-POS.

English

CAD Files

3D PDF

3D

Customer View Model

ENG_CVM_CVM_1-583717-3_AU.2d_dxf.zip

English

Customer View Model

ENG_CVM_CVM_1-583717-3_AU.3d_igs.zip

English

Customer View Model

ENG_CVM_CVM_1-583717-3_AU.3d_stp.zip

English

By downloading the CAD file I accept and agree to the Terms and Conditions of use.

Product Specifications

Product Specification

English

Product Specification

English

Instruction Sheets

Instruction Sheet (U.S.)

English

Agency Approvals

UL Report

English