1747996-3 ✔ ACTIVE

Grace Inertia | GRACE INERTIA 12.4

TE Internal #: 1747996-3

GRACE INERTIA 12.4, Rectangular Power Connectors, Header, Receptacle, Wire-to-Board, 2 Position, 12.4mm [.488in] Centerline, Printed Circuit Board

View on TE.com >

Connectors > Power Connectors > Rectangular Power > Rectangular Power Connectors

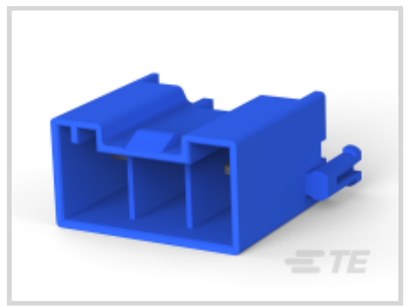
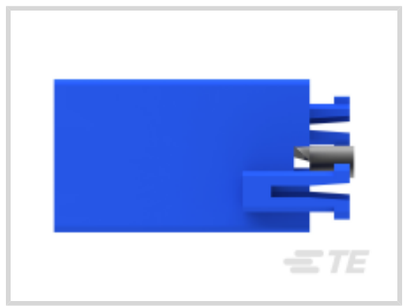
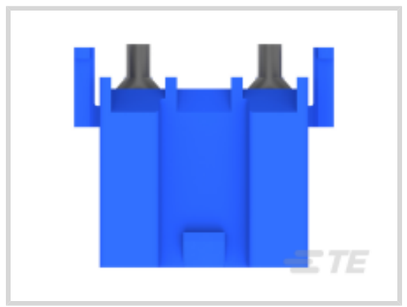
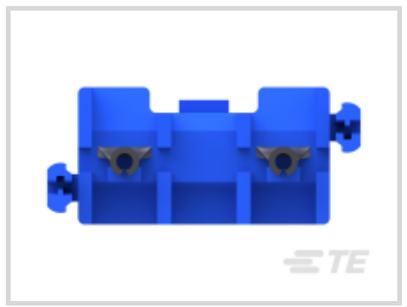
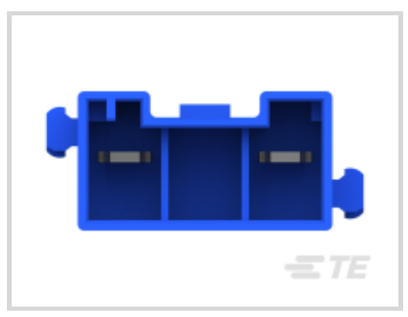

Rectangular Power Connector Type: **Header**

Connector & Housing Type: **Receptacle**

Connector System: **Wire-to-Board**

Number of Positions: **2**

Centerline (Pitch): **12.4 mm [.488 in]**

Features

Product Type Features

Rectangular Power Connector Type	Header
Connector & Housing Type	Receptacle
Connector System	Wire-to-Board
Sealable	No
Connector & Contact Terminates To	Printed Circuit Board

Configuration Features

Number of Positions	2
Keying	C
PCB Mount Orientation	Vertical
Number of Power Positions	2
Number of Signal Positions	0
Number of Rows	1

Electrical Characteristics

Operating Voltage	600 VDC

Contact Features

Contact Layout	Inline
Contact Base Material	Copper Alloy
Contact Current Rating (Max)	20 A
Contact Retention Within Housing	With
Contact Type	Tab
PCB Contact Termination Area Plating Material	Tin
Contact Mating Area Plating Material	Tin
Contact Mating Area Plating Material Thickness	.8 µm[31.5 µin]
Tab Width	3.1 mm[.122 in]

Termination Features

Termination Post & Tail Length	3.1 mm[.122 in]
Termination Method to Printed Circuit Board	Through Hole - Solder

Mechanical Attachment

Strain Relief	Without
Mating Alignment Type	Keyed
Mating Alignment	With
PCB Mount Alignment	Without
Panel Mount Feature	Without
PCB Mount Retention	With
PCB Mount Retention Type	Boardlock
Connector Mounting Type	Board Mount
Mating Retention	With
Mating Retention Type	Latch

Housing Features

Centerline (Pitch)	12.4 mm[.488 in]
Housing Color	Blue
Housing Material	Nylon 6/6 GF

Dimensions

Wire Size	2427 – 7144 CMA
Height	10.7 mm[.421 in]

Usage Conditions

Operating Temperature Range	-40 – 105 °C[-40 – 221 °F]

Operation/Application

Circuit Application	Power

Industry Standards

UL Flammability Rating	UL 94V-0
Glow Wire Rating	GWT 750°C (Without Flame)

Packaging Features

Packaging Method	Bag
Packaging Quantity	150

Other

For Use With	Plug Housing

Product Compliance

For compliance documentation, visit the product page on TE.com>

EU RoHS Directive 2011/65/EU	Compliant
EU ELV Directive 2000/53/EC	Compliant
China RoHS 2 Directive MIIT Order No 32, 2016	No Restricted Materials Above Threshold
EU REACH Regulation (EC) No. 1907/2006	Current ECHA Candidate List: JAN 2021 (211) Candidate List Declared Against: JAN 2021 (211) Does not contain REACH SVHC
Halogen Content	Not Low Halogen - contains Br or Cl > 900 ppm.
Solder Process Capability	Wave solder capable to 265°C

Product Compliance Disclaimer

This information is provided based on reasonable inquiry of our suppliers and represents our current actual knowledge based on the information they provided. This information is subject to change. The part numbers that TE has identified as EU RoHS compliant have a maximum concentration of 0.1% by weight in homogenous materials for lead, hexavalent chromium, mercury, PBB, PBDE, DBP, BBP, DEHP, DIBP, and 0.01% for cadmium, or qualify for an exemption to these limits as defined in the Annexes of Directive 2011/65/EU (RoHS2). Finished electrical and electronic equipment products will be CE marked as required by Directive 2011/65/EU. Components may not be CE marked. Additionally, the part numbers that TE has identified as EU ELV compliant have a maximum concentration of 0.1% by weight in homogenous materials for lead, hexavalent chromium, and mercury, and 0.01% for cadmium, or qualify for an exemption to these limits as defined in the Annexes of Directive 2000/53/EC (ELV). Regarding the REACH Regulation, the information TE provides on SVHC in articles for this part number is based on the latest European Chemicals Agency (ECHA) 'Guidance on requirements for substances in articles' posted at this URL: https://echa.europa.eu/guidance-documents/guidance-on-reach

Compatible Parts

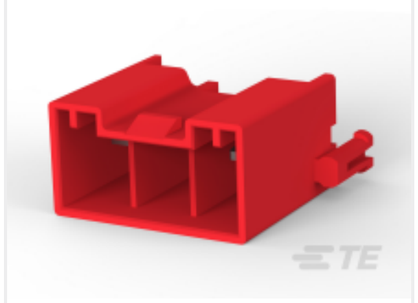

TE Part # 1747996-2
GHC EYELET 12.4 2POS HEADER ASSY RED

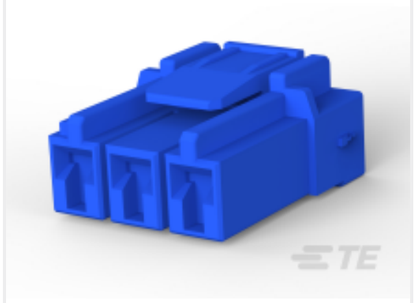

TE Part # 1747995-3
GHC EYELET 6.2 3POS PLUG HOUSING BLUE



TE Part # 1747996-1
GHC EYELET 12.4 2POS HEADER ASSY NATURAL

Also in the Series | GRACE INERTIA 12.4



Rectangular Power Connectors(4)

Customers Also Bought



TE Part #1565084-1
STD Temp GRACE INERTIA Plug



TE Part #1376390-1
STD Temp Power Key Plug



TE Part #1376383-1
Glow Wire Power Key Header



TE Part #1565085-1
STD Temp GRACE INERTIA Cap

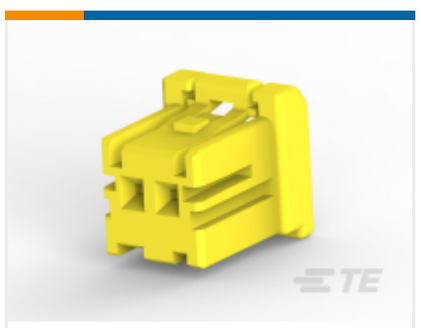

TE Part #1-1971030-8
STD Temp Sig GRACE INERTIA Plug



TE Part #1376478-3
2.5MM SIGNAL MATE CONN HEADER



TE Part #1376385-1
5mm B-T-W Conn. 6P HDR ASSEMBL



TE Part #63824-5
FASTON .250 (6.35 MM) PCB TAB TPBR



TE Part #1-2232960-4
4P POTTED RAST 2.5 HEADER

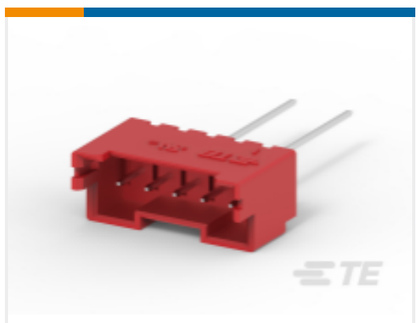

TE Part #1-2299683-5
EP2.5 HDR 5P VERT W/O BOSS, TAPING,RED

Documents

Product Drawings

GHC EYELET 12.4 2POS HEADER ASSY BLUE

English

CAD Files

3D PDF

3D

Customer View Model

ENG_CVM_CVM_1747996-3_F.2d_dxf.zip

English

Customer View Model

ENG_CVM_CVM_1747996-3_F.3d_igs.zip

English

Customer View Model

ENG_CVM_CVM_1747996-3_F.3d_stp.zip

English

By downloading the CAD file I accept and agree to the Terms and Conditions of use.

Datasheets & Catalog Pages

1-1773883-5 GRACE INERTIA connector quick reference guide

English

Product Specifications

Application Specification

English

Product Environmental Compliance

MD_1747996-3_101220122352

English

MD_1747996-3_101220122352

English

Agency Approvals

UL Report

English