177899-1 ✔ ACTIVE

Power Double Lock

TE Internal #: 177899-1

Power Double Lock, Rectangular Power Connectors, Housing, Plug, Wire-to-Wire / Wire-to-Panel / Wire-to-Board, 3 Position, 3.96mm [.156in] Centerline

View on TE.com >

Connectors > Power Connectors > Rectangular Power > Rectangular Power Connectors > STD Temp Power Double Lock Plug

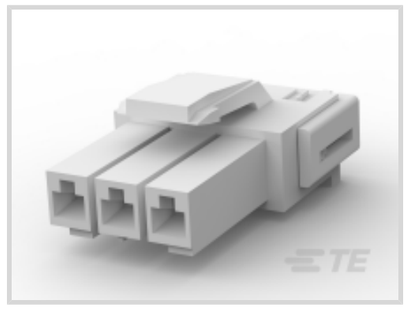





Rectangular Power Connector Type: **Housing**

Connector & Housing Type: **Plug**

Connector System: **Wire-to-Board, Wire-to-Panel, Wire-to-Wire**

Number of Positions: **3**

Centerline (Pitch): **3.96 mm [.156 in]**

All STD Temp Power Double Lock Plug (68)

Features

Product Type Features

Rectangular Power Connector Type	Housing
Connector & Housing Type	Plug
Connector System	Wire-to-Board, Wire-to-Panel, Wire-to-Wire
Sealable	No
Connector & Contact Terminates To	Wire & Cable

Configuration Features

Number of Positions	3
Number of Power Positions	0
Number of Signal Positions	0
Number of Rows	1

Electrical Characteristics

Operating Voltage	300 VAC

Contact Features

Contact Layout	Inline
Contact Retention Within Housing	Without
Contact Type	Socket

Termination Features

Termination Method to Wire & Cable	Crimp
Wire/Cable Type	Discrete Wire
Wire Type	Stranded

Mechanical Attachment

Connector Mounting Type	Cable Mount (Free-Hanging)

Housing Features

Centerline (Pitch)	3.96 mm[.156 in]
Housing Color	Natural
Housing Material	Nylon 6/6

Usage Conditions

Operating Temperature Range	-30 – 105 °C[-22 – 221 °F]

Operation/Application

Circuit Application	Power & Signal

Industry Standards

UL Flammability Rating	UL 94V-0
Glow Wire Rating	Standard Part - Not Glow Wire
Agency/Standard Number	C22.2 No. 182.3, UL 1977
Agency/Standard	CNR, USR

Packaging Features

Packaging Method	Bag
Packaging Quantity	400

Other

For Use With	Cap: 177907 or 179464, Contacts: 177914 or 177915, Double Lock Plate 177919-1, Header: 179839, Header: 179844

Product Compliance

For compliance documentation, visit the product page on TE.com>

EU RoHS Directive 2011/65/EU	Compliant
EU ELV Directive 2000/53/EC	Compliant
China RoHS 2 Directive MIIT Order No 32, 2016	No Restricted Materials Above Threshold
EU REACH Regulation (EC) No. 1907/2006	Current ECHA Candidate List: JAN 2021 (211) Candidate List Declared Against: JAN 2021 (211) Does not contain REACH SVHC
Halogen Content	Low Halogen - Br, Cl, F, I < 900 ppm per homogenous material. Also BFR/CFR/PVC Free
Solder Process Capability	Not applicable for solder process capability

Product Compliance Disclaimer

This information is provided based on reasonable inquiry of our suppliers and represents our current actual knowledge based on the information they provided. This information is subject to change. The part numbers that TE has identified as EU RoHS compliant have a maximum concentration of 0.1% by weight in homogenous materials for lead, hexavalent chromium, mercury, PBB, PBDE, DBP, BBP, DEHP, DIBP, and 0.01% for cadmium, or qualify for an exemption to these limits as defined in the Annexes of Directive 2011/65/EU (RoHS2). Finished electrical and electronic equipment products will be CE marked as required by Directive 2011/65/EU. Components may not be CE marked. Additionally, the part numbers that TE has identified as EU ELV compliant have a maximum concentration of 0.1% by weight in homogenous materials for lead, hexavalent chromium, and mercury, and 0.01% for cadmium, or qualify for an exemption to these limits as defined in the Annexes of Directive 2000/53/EC (ELV). Regarding the REACH Regulation, the information TE provides on SVHC in articles for this part number is based on the latest European Chemicals Agency (ECHA) 'Guidance on requirements for substances in articles' posted at this URL: https://echa.europa.eu/guidance-documents/guidance-on-reach

Compatible Parts



TE Part # CAT-P87024-P729A
Glow Wire Power Double Lock Plug



TE Part # CAT-P87024-H342
STD Temp Power Double Lock Header



TE Part # CAT-P87024-R2435
Power Double Lock Receptacle



TE Part # 177907-1
POWER DBL LOCK CAP P/M 3P



TE Part # 179593-1
AMP POWER D/LOCK RECCONT. L/P



TE Part # 179464-1
POWER DBL LOCK CAP HSG F/H 3P



TE Part # 179592-2
POWER D/LOCK REC CONT. H/P L/P



TE Part # CAT-P87024-C1701A
Glow Wire Power Double Lock Cap



TE Part # 179592-1
AMP POWER D/LOCK REC CONT. L/P



TE Part # 179593-2
POWER D/LOCK REC CONT. H/P L/P

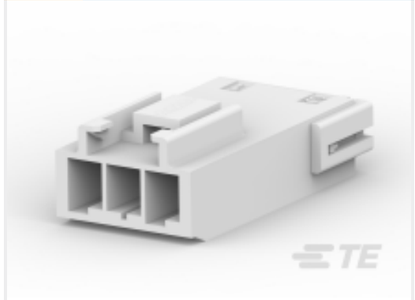

TE Part # 5-179464-1
POWER DBL LOCK CAP HSG F/H 3P (GWT)



TE Part # 1-179844-1
PDL 2P HDR 7.92 SR V/T ASSY NAT

TE Part # 179851-1
AMP POWER D/LOCK TAB HDR 3P V

Also in the Series | Power Double Lock



Connector Contacts(1)



Insertion & Extraction Tools(2)

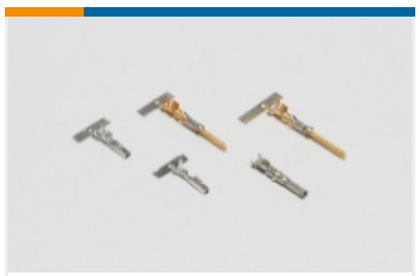

Power Contacts(18)



Rectangular Connector Locking(14)



Rectangular Power Connectors(277)

Customers Also Bought



TE Part #917684-1
Signal Double Lock Receptacle

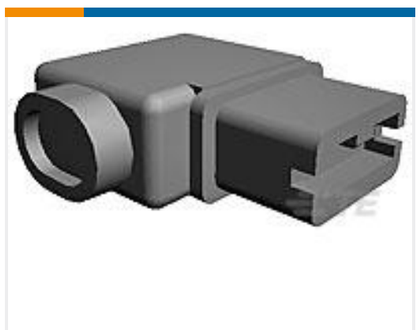

TE Part #1-176497-1
250 HSG. PL EX FLAG REC. NAT

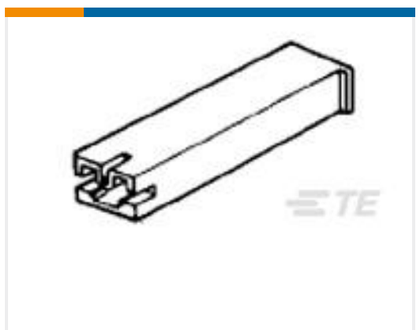

TE Part #173974-1
187 HSG. PL MKII REC. NAT



TE Part #170213-2
250 FASTON,REC.,18-14 AWG,TPBR



TE Part #170325-1
187 PL MKII REC. 20-16AWG PTBR

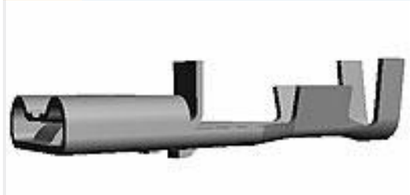

TE Part #170328-1
250 PL MKII REC. 18-14AWG PTBR



TE Part #1-1565083-2
STD Temp GRACE INERTIA Plug



TE Part #1746872-1
TH/.025 CONNECTOR SYSTEM, HOUSING



TE Part #175022-1
250 PL EX REC. 18-14AWG PTBR

Documents

Product Drawings

POWER DBL LOCK PLUG HSG 3P

English

CAD Files

3D PDF

3D

Customer View Model

ENG_CVM_CVM_177899-1_P.2d_dxf.zip

English

Customer View Model

ENG_CVM_CVM_177899-1_P.3d_igs.zip

English

Customer View Model

ENG_CVM_CVM_177899-1_P.3d_stp.zip

English

By downloading the CAD file I accept and agree to the Terms and Conditions of use.

Datasheets & Catalog Pages

SOFT_SHELL_PIN_AND_SOCKET_CONNECTORS_CATALOG

English

Product Specifications

Application Specification

English

Product Environmental Compliance

MD_177899-1_111620181045_dmtec

English

MD_177899-1_111620181045_dmtec

English

Instruction Sheets

Instruction Sheet (non U.S.)

English

AMP POWER DOUBLELOCK CONNECTOR SERIES

English

Agency Approvals

UL Report

English

UL Report

English