179720-1 ✔ ACTIVE

Positive Lock | Positive Lock 187

TE Internal #: 179720-1

Positive Lock 187, Crimp Terminal Housings, Receptacle, Receptacle, 2 Position, Straight, UL 94V-0, Natural Crimp Terminal Housing Housing Color

View on TE.com >

Terminals & Splices > Terminal Housings, Insulation Sleeves & Blocks > Crimp Terminal Housings

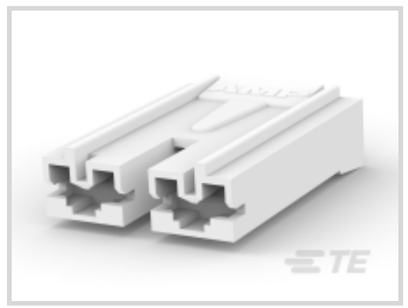


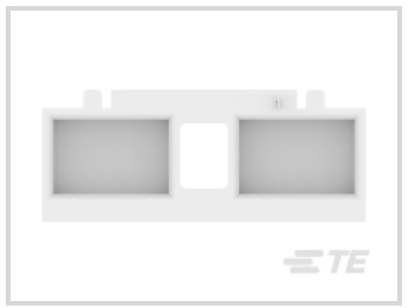
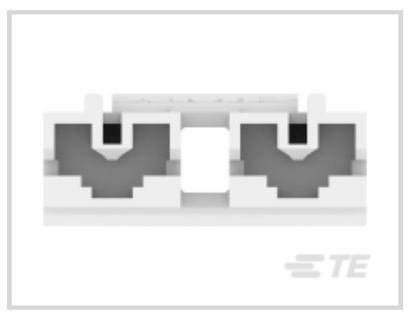

Terminal & Splice Type: **Receptacle**

Housing Type: **Receptacle**

Number of Crimp Terminal Housing Positions: **2**

Crimp Terminal Housing Terminal Orientation: **Straight**

Crimp Terminal Housing UL Flammability Rating: **UL 94V-0**

Features

Product Type Features

Product Type	Terminal Housing
Terminates To	Wire & Cable
Connector System	Wire-to-Board, Wire-to-Wire
Housing Type	Receptacle
Sealable	No
Insulated	No

Configuration Features

Number of Crimp Terminal Housing Positions	2

Body Features

Crimp Terminal Housing Housing Color	Natural
Crimp Terminal Housing Mating Retention	With
Crimp Terminal Housing Mating Alignment	With

Contact Features

Terminal & Splice Type	Receptacle

Crimp Terminal Housing Terminal Orientation	Straight

Mechanical Attachment

Mating Alignment Type	Polarization
Mating Retention Type	Latch
Crimp Terminal Housing Mounting Style	Cable Mount (Free-Hanging)

Housing Features

Crimp Terminal Housing Housing Material	Nylon

Dimensions

Crimp Terminal Housing Centerline	10 mm[.393 in]

Usage Conditions

Operating Temperature Range	-40 – 105 °C[-40 – 221 °F]

Industry Standards

Crimp Terminal Housing UL Flammability Rating	UL 94V-0

Packaging Features

Packaging Quantity	500

Product Compliance

For compliance documentation, visit the product page on TE.com>

EU RoHS Directive 2011/65/EU	Compliant
EU ELV Directive 2000/53/EC	Compliant
China RoHS 2 Directive MIIT Order No 32, 2016	No Restricted Materials Above Threshold
EU REACH Regulation (EC) No. 1907/2006	Current ECHA Candidate List: JAN 2021 (211) Candidate List Declared Against: JAN 2021 (211) Does not contain REACH SVHC
Halogen Content	Low Halogen - Br, Cl, F, I < 900 ppm per homogenous material. Also BFR/CFR/PVC Free
Solder Process Capability	Not applicable for solder process capability

Product Compliance Disclaimer

This information is provided based on reasonable inquiry of our suppliers and represents our current actual knowledge based on the information they provided. This information is subject to change. The part numbers that TE has identified as EU RoHS compliant have a maximum concentration of 0.1% by weight in homogenous materials for lead, hexavalent chromium, mercury, PBB, PBDE, DBP, BBP, DEHP, DIBP, and 0.01% for cadmium, or qualify for an exemption to these

limits as defined in the Annexes of Directive 2011/65/EU (RoHS2). Finished electrical and electronic equipment products will be CE marked as required by Directive 2011/65/EU. Components may not be CE marked. Additionally, the part numbers that TE has identified as EU ELV compliant have a maximum concentration of 0.1% by weight in homogenous materials for lead, hexavalent chromium, and mercury, and 0.01% for cadmium, or qualify for an exemption to these limits as defined in the Annexes of Directive 2000/53/EC (ELV). Regarding the REACH Regulation, the information TE provides on SVHC in articles for this part number is based on the latest European Chemicals Agency (ECHA) 'Guidance on requirements for substances in articles' posted at this URL: https://echa.europa.eu/guidance-documents/guidance-on-reach

Compatible Parts

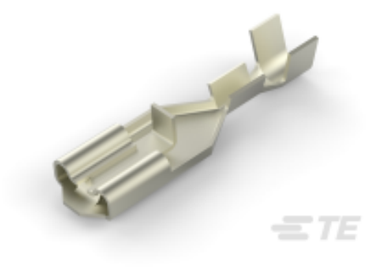

TE Part # 170330-2
PL 187 RECEPTACLE 24-20 AWG NPPHBZ



TE Part # 170332-1
PL 187 RECEPTACLE 18-14 AWG PTPBR



TE Part # 170324-2
PL 187 RECEPTACLE 24-20 AWG 0.3 NPCU



TE Part # 170326-5
187 PL MKII REC. 18-14AWG PTPB



TE Part # 170326-1
187 PL MKII REC. 18-14AWG PTBR

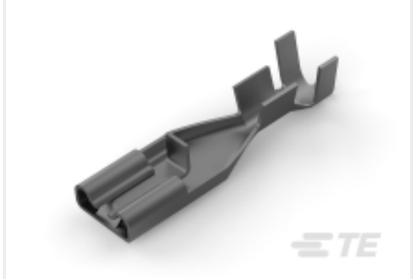

TE Part # 170325-5
187 PL MKII REC. 20-16AWG PTBR

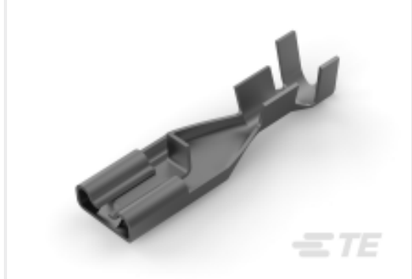

TE Part # 170325-1
187 PL MKII REC. 20-16AWG PTBR



TE Part # 170324-1
187 PL MKII REC. 24-20AWG PTBR



TE Part # 170331-1
PL MKII 187 REC 20-16AWG PTBR LP



TE Part # 926319-1
PL 250 REC HSG 2P NYLON BLACK



TE Part # 170330-1
PL MKII 187 REC 24-20AWG PTBR LP

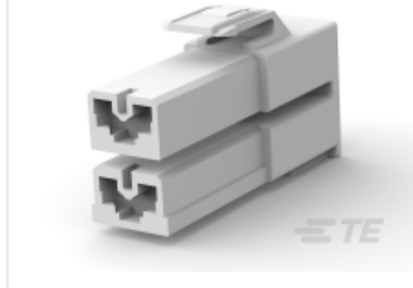

TE Part # 1-1743102-1
2 POS PL 187 HOUSING NATURAL 6/6 NYLON

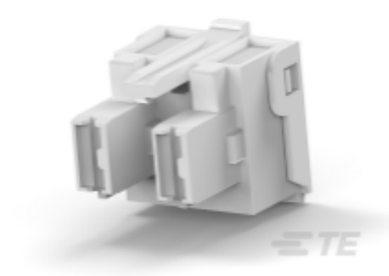

TE Part # 1-1743206-1
250 FLAG P-LOCK HSG 2P 12.0 GWT

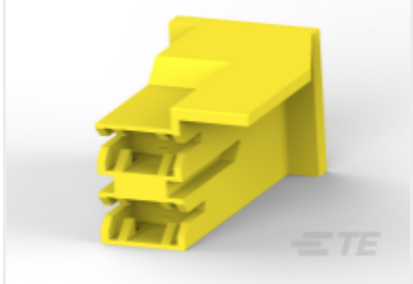

TE Part # 1969717-3
HSG, REC., POS-LOCK, MK I 2P, 6.35 SR YEL

Also in the Series | Positive Lock 187



Crimp Terminal Housings(87)



Insertion & Extraction Tools(2)



Insulation Boots & Sleeves(9)

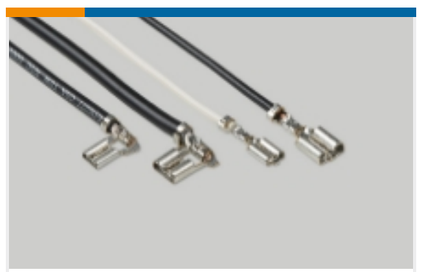

Quick Disconnects(56)

Customers Also Bought



TE Part #1-1971905-3
Glow Wire GRACE INERTIA Plug



TE Part #1565084-1
STD Temp GRACE INERTIA Plug



TE Part #1565079-1
GRACE INERTIA Receptacle

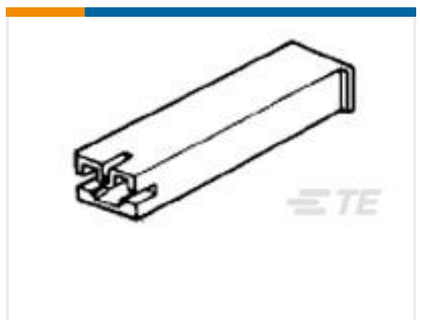

TE Part #173974-2
PL 187 (4.8 MM) HOUSING RECEPTACLE

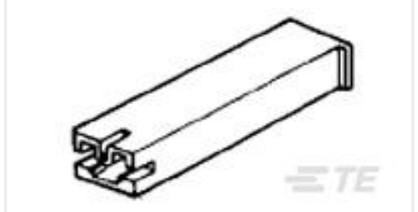

TE Part #173974-4
PL 187 (4.8 MM) HOUSING RECEPTACLE



TE Part #1-178708-1
187 SLEEV PL EX FLAG NAT



TE Part #1-178708-7
PL EX SLEEVE 187 FLAG RED 6/6 NYLON



TE Part #918254-1
INS,CRIMPER

Documents

Product Drawings

187 HSG. PL MKII REC. 10mm 2P NAT

English

CAD Files

3D PDF

3D

Customer View Model

ENG_CVM_CVM_179720-1_F.2d_dxf.zip

English

Customer View Model

ENG_CVM_CVM_179720-1_F.3d_igs.zip

English

Customer View Model

ENG_CVM_CVM_179720-1_F.3d_stp.zip

English

By downloading the CAD file I accept and agree to the Terms and Conditions of use.

Datasheets & Catalog Pages

Positive Lock Receptacles

English

FASTON Housings

English

Product Specifications

187 SERIES POSITIVE LOCK MARK-II CONNECTOR

Japanese

Product Specification

Japanese

Product Environmental Compliance

Product Compliance

English

Product Compliance

English

Agency Approvals

UL Report

English