2101676-2 ✔ ACTIVE

AMP

TE Internal #: 2101676-2

Standard Circular Connectors, Wire-to-Panel, 7 Position, Sealable, Reverse Gender, Black Chromium, Copper Alloy, PEEK, .205mm² Wire Size, 2 Shell Size

View on TE.com >

Connectors > Circular Connectors > Standard Circular Connectors

Connector System: **Wire-to-Panel**

Number of Positions: **7**

Sealable: **Yes**

Reverse Gender: **Yes**

Shell Plating Material: **Black Chromium**

Features

Product Type Features

Product Type	Connector
Connector System	Wire-to-Panel
Sealable	Yes
Circular Connector Type	Receptacle
Shell Type	Metal

Configuration Features

Keying	Double Key
Number of Positions	7
Contacts Preloaded	Yes

Electrical Characteristics

Operating Voltage	875 VAC

Body Features

Environmental Protection Type	Sealed
Environmental Protection	With
Shell Plating Material	Black Chromium
Shell Base Material	Copper Alloy
Circular Connector Insulation Material Type	PEEK

Contact Features

Reverse Gender	Yes
Contact Layout Arrangement	Circular
Circular Connector Contact Type	Socket

Mechanical Attachment

Mating Retention Type	Threaded Coupling
Mating Alignment	With
Mating Alignment Type	Keyed
Mating Retention	With

Housing Features

Circular Connector Shell Size	2

Dimensions

Panel Thickness	3 mm[.118 in]
Assembly Length	23.75 mm
Wire Size	.205 mm²

Usage Conditions

Operating Temperature Range	-55 – 125 °C

Packaging Features

Packaging Quantity	10

Product Compliance

For compliance documentation, visit the product page on TE.com>

EU RoHS Directive 2011/65/EU	Compliant
EU ELV Directive 2000/53/EC	Not Yet Reviewed
China RoHS 2 Directive MIIT Order No 32, 2016	No Restricted Materials Above Threshold
EU REACH Regulation (EC) No. 1907/2006	Current ECHA Candidate List: JAN 2021 (211) Candidate List Declared Against: JAN 2019 (197) SVHC > Threshold: Not Yet Reviewed
Halogen Content	Low Halogen - Br, Cl, F, I < 900 ppm per homogenous material. Also BFR/CFR/PVC Free
Solder Process Capability	Hand solderable with tin/lead solder

Product Compliance Disclaimer

This information is provided based on reasonable inquiry of our suppliers and represents our current actual knowledge based on the information they provided. This information is subject to change. The part numbers that TE has identified as EU RoHS compliant have a maximum concentration of 0.1% by weight in homogenous materials for lead, hexavalent chromium, mercury, PBB, PBDE, DBP, BBP, DEHP, DIBP, and 0.01% for cadmium, or qualify for an exemption to these limits as defined in the Annexes of Directive 2011/65/EU (RoHS2). Finished electrical and electronic equipment products will be CE marked as required by Directive 2011/65/EU. Components may not be CE marked. Additionally, the part numbers that TE has identified as EU ELV compliant have a maximum concentration of 0.1% by weight in homogenous materials for lead, hexavalent chromium, and mercury, and 0.01% for cadmium, or qualify for an exemption to these limits as defined in the Annexes of Directive 2000/53/EC (ELV). Regarding the REACH Regulation, the information TE provides on SVHC in articles for this part number is based on the latest European Chemicals Agency (ECHA) 'Guidance on requirements for substances in articles' posted at this URL: https://echa.europa.eu/guidance-documents/guidance-on-reach

Customers Also Bought

TE Part #8-1614972-6
CPF 1206 715R 0.1% 25PPM 1K RL

TE Part #208494-3
CMC SERIES 3

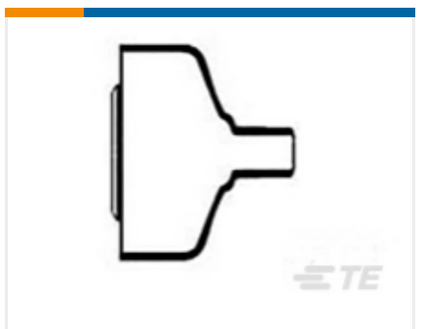

TE Part #808645-000
Rectangular Heat Shrink Boots: Non Lipped, Straight

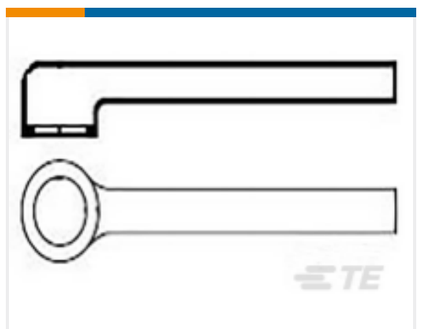

TE Part #388816-000
Low Profile Heat Shrink Boots: Blow Mold, Lipped, Right Angle

TE Part #2101550-2
PLUG,7 POS,Sz103,w/SOLDER CUPS, 240 POT

TE Part #2101676-1
RCPT,7 POS,Sz103 w/SOLDER CUPS, 140 POL

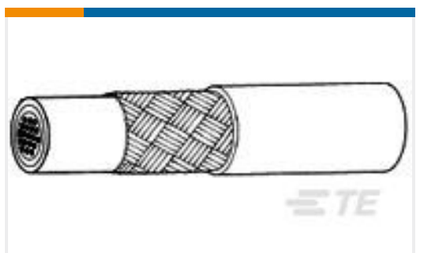

TE Part #304531-000
55FB1511-22-7L5-0

TE Part #63277-1
MAG-MATE 090 PIN 22-20 016TPBR

TE Part #794216-3
MINI UMNL2 PIN 30-26 AWG AU

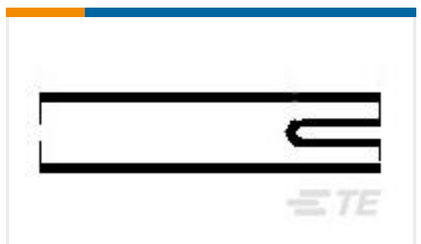

TE Part #CX4639-000
302A821-4/180-0

Documents

Product Drawings

RCPT,7 POS,Sz103 w/SOLDER CUPS,240 POL

English

CAD Files

3D PDF

3D

Customer View Model

ENG_CVM_CVM_2101676-2_B_c-2101676-2-b.2d_dxf.zip

English

Customer View Model

ENG_CVM_CVM_2101676-2_B_c-2101676-2-b.3d_igs.zip

English

Customer View Model

ENG_CVM_CVM_2101676-2_B_c-2101676-2-b.3d_stp.zip

English

By downloading the CAD file I accept and agree to the Terms and Conditions of use.

Datasheets & Catalog Pages

Products for Aerospace and Defense

English

Product Specifications

Product Specification

English