2-592404-1 ✔ ACTIVE

AMP

TE Internal #: 2-592404-1

Junction Contacts, Compatible With Contact Size 20, Wire-to-Panel, 1 Position, Wire & Cable, Panel Mount

View on TE.com >

Connectors > Terminal Junction Modules & Accessories > Junction Contacts



Compatible With Contact Size: **20**

Connector System: **Wire-to-Panel**

Number of Positions: **1**

Connector & Contact Terminates To: **Wire & Cable**

Connector Mounting Type: **Panel Mount**

Features

Product Type Features

Product Type	Terminal Junction System Component
Terminal Junction System Component Type	Contact
Connector System	Wire-to-Panel
Connector & Contact Terminates To	Wire & Cable

Configuration Features

Number of Positions	1

Contact Features

Contact Mating Area Plating Material	Gold
Class	D
Contact Base Material	Brass, Leaded Copper
Compatible With Contact Size	20

Mechanical Attachment

Connector Mounting Type	Panel Mount

Dimensions

Length	.42 mm[10.62 in]

Usage Conditions

Operating Temperature Range	-65 – 200 °C[-85 – 392 °F]

Other

Band 3 Color	Brown
Band 1 Color	Brown
Band 2 Color	Black

Product Compliance

For compliance documentation, visit the product page on TE.com>

EU RoHS Directive 2011/65/EU	Not Compliant
EU ELV Directive 2000/53/EC	Compliant with Exemptions
China RoHS 2 Directive MIIT Order No 32, 2016	Restricted Materials Above Threshold
EU REACH Regulation (EC) No. 1907/2006	Current ECHA Candidate List: JAN 2021 (211) Candidate List Declared Against: JAN 2021 (211) SVHC > Threshold: Pb (3.7%) **Article Safe Usage Statements:** Do not eat, drink or smoke when using this product. Wash thoroughly after handling. Recycle if possible and dispose of the article by following all applicable governmental regulations relevant to your geographic location.
Halogen Content	Low Halogen - Br, Cl, F, I < 900 ppm per homogenous material. Also BFR/CFR/PVC Free
Solder Process Capability	Not applicable for solder process capability

Product Compliance Disclaimer

This information is provided based on reasonable inquiry of our suppliers and represents our current actual knowledge based on the information they provided. This information is subject to change. The part numbers that TE has identified as EU RoHS compliant have a maximum concentration of 0.1% by weight in homogenous materials for lead, hexavalent chromium, mercury, PBB, PBDE, DBP, BBP, DEHP, DIBP, and 0.01% for cadmium, or qualify for an exemption to these limits as defined in the Annexes of Directive 2011/65/EU (RoHS2). Finished electrical and electronic equipment products will be CE marked as required by Directive 2011/65/EU. Components may not be CE marked. Additionally, the part numbers that TE has identified as EU ELV compliant have a maximum concentration of 0.1% by weight in homogenous materials for lead, hexavalent chromium, and mercury, and 0.01% for cadmium, or qualify for an exemption to these limits as defined in the Annexes of Directive 2000/53/EC (ELV). Regarding the REACH Regulation, the information TE provides on SVHC in articles for this part number is based on the latest European Chemicals Agency (ECHA) 'Guidance on requirements for substances in articles' posted at this URL: https://echa.europa.eu/guidance-documents/guidance-on-reach

Compatible Parts



TE Part # 601966-1
CRIMPING TOOL M22520/2-01

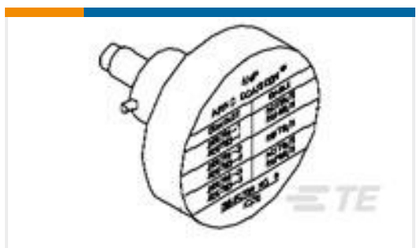

TE Part # 1-601966-5
POSITIONER

Customers Also Bought



TE Part #104257-9
10 MTE RCPT HSG SR LATCH .100

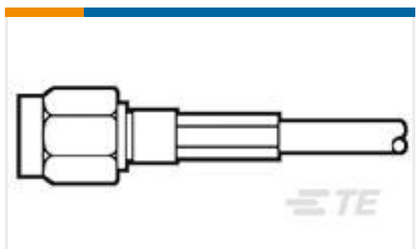

TE Part #1051650-1
2031 5005 00



TE Part #1051933-1
2034 5005 00



TE Part #YDTS26W13-35SAV001
D38999: Straight Plug, 13-35 Insert

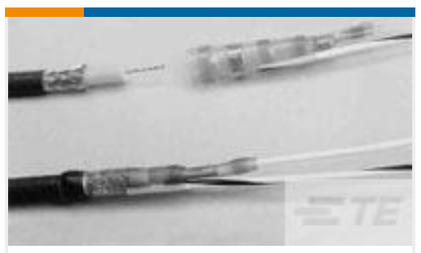

TE Part #024278-000
D-181-3222-90/9



TE Part #1056462-1
2837 7388 02



TE Part #1052071-1
2037 5007 00,SMA RA CABLE PLUG



TE Part #1052075-1
2037 5008 00,SMA RA CABLE PLUG

TE Part #109029-ZZ
CONT SOC ASSY

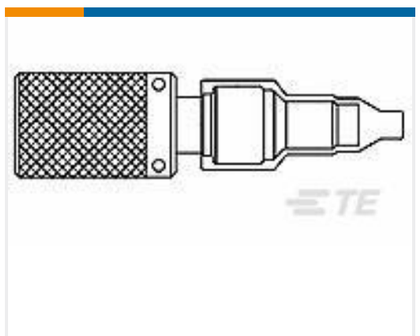

TE Part #018591-000
DK-621-0011-S

Documents

Product Drawings

5000-027-0020

English

CAD Files

3D PDF

3D

Customer View Model

ENG_CVM_CVM_2-592404-1_J_c-2-592404-1-j.2d_dxf.zip

English

Customer View Model

ENG_CVM_CVM_2-592404-1_J_c-2-592404-1-j.3d_igs.zip

English

Customer View Model

ENG_CVM_CVM_2-592404-1_J_c-2-592404-1-j.3d_stp.zip

English

By downloading the CAD file I accept and agree to the **Terms and Conditions** of use.

Datasheets & Catalog Pages

Products for Aerospace and Defense

English