3-1534799-3 ✔ ACTIVE

RAST

TE Internal #: 3-1534799-3

Standard Edge Connectors, Wire-to-Board, 13 Position, 2.5mm [.098in] Centerline, Insulation Displacement Crimp (IDC), 1 Row, Natural Housing Color

View on TE.com >

Connectors > PCB Connectors > Card Edge Connectors > Standard Edge Connectors



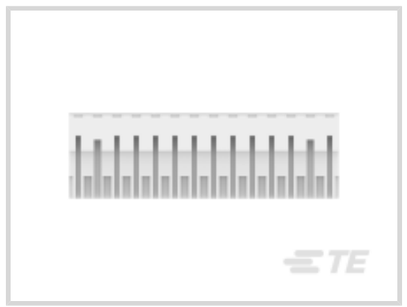
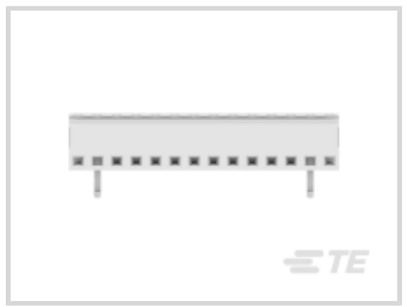


Connector System: **Wire-to-Board**

Number of Positions: **13**

Centerline (Pitch): **2.5 mm [.098 in]**

Termination Method to Wire & Cable: **Insulation Displacement Crimp (IDC)**

Number of Rows: **1**

Features

Product Type Features

Connector System	Wire-to-Board
Connector & Housing Type	Receptacle
Connector & Contact Terminates To	Printed Circuit Board

Configuration Features

Card Entry Style	Side
Compatible With Wire & Cable Type	Discrete Wire
Number of Positions	13
Number of Rows	1
Connector Contact Load Condition	Selectively Loaded
PCB Mount Orientation	Right Angle

Electrical Characteristics

Operating Voltage	250 V

Body Features

Connector Profile	Standard

Contact Features

Contact Retention Within Housing	With
Contact Type	Socket
Contact Mating Area Plating Material Thickness	3 – 6 µm
Contact Mating Area Plating Material	Tin
PCB Contact Termination Area Plating Material	Tin
Contact Base Material	Copper Tin
Contact Current Rating (Max)	2 A

Termination Features

Termination Method to Wire & Cable	Insulation Displacement Crimp (IDC)

Mechanical Attachment

Mating Alignment Type	Keyed
Mating Retention	Without
Mating Alignment	With
Contact Retention Type Within Housing	Locking Lance
PCB Mount Alignment	With
Panel Mount Feature	Without
PCB Mount Retention	Without
Connector Mounting Type	Cable Mount (Free-Hanging)

Housing Features

Housing Entry Configuration	Both Ends Open
Centerline (Pitch)	2.5 mm[.098 in]
Housing Color	Natural
Housing Material	PA 6 GF

Dimensions

Card Slot Depth	5.05 mm
Connector Height	7.3 mm[.287 in]
PCB Thickness (Recommended)	1.5 mm[.059 in]
Accepts Wire Insulation Diameter Range	1.2 – 1.4 mm[.047 – .055 in]
Wire Size	.22 – .35 mm^2

Usage Conditions

Operating Temperature Range	-40 – 110 °C[-40 – 230 °F]

Operation/Application

Circuit Application	Signal

Industry Standards

UL Flammability Rating	UL 94V-2

Packaging Features

Packaging Method	Box
Packaging Quantity	4312

Other

Position Locations Omitted	6

Product Compliance

For compliance documentation, visit the product page on TE.com>

EU RoHS Directive 2011/65/EU	Compliant
EU ELV Directive 2000/53/EC	Compliant
China RoHS 2 Directive MIIT Order No 32, 2016	No Restricted Materials Above Threshold
EU REACH Regulation (EC) No. 1907/2006	Current ECHA Candidate List: JAN 2021 (211) Candidate List Declared Against: JUN 2020 (209) SVHC > Threshold: Not Yet Reviewed
Halogen Content	Not Low Halogen - contains Br or Cl > 900 ppm.
Solder Process Capability	Not applicable for solder process capability

Product Compliance Disclaimer

This information is provided based on reasonable inquiry of our suppliers and represents our current actual knowledge based on the information they provided. This information is subject to change. The part numbers that TE has identified as EU RoHS compliant have a maximum concentration of 0.1% by weight in homogenous materials for lead, hexavalent chromium, mercury, PBB, PBDE, DBP, BBP, DEHP, DIBP, and 0.01% for cadmium, or qualify for an exemption to these limits as defined in the Annexes of Directive 2011/65/EU (RoHS2). Finished electrical and electronic equipment products will be CE marked as required by Directive 2011/65/EU. Components may not be CE marked. Additionally, the part numbers that TE has identified as EU ELV compliant have a maximum concentration of 0.1% by weight in homogenous materials for lead, hexavalent chromium, and mercury, and 0.01% for cadmium, or qualify for an exemption to these limits as defined in the Annexes of Directive 2000/53/EC (ELV). Regarding the REACH Regulation, the information TE provides on SVHC in articles for this part number is based on the latest European Chemicals Agency (ECHA) 'Guidance on requirements for substances in articles' posted at this URL: https://echa.europa.eu/guidance-documents/guidance-on-reach

Compatible Parts



TE Part # 1-1740501-3
AMP DUOPLUG2.5 MK II HOUSING W. PCB LOCK



TE Part # 1-1740918-3
AMP DUOPLUG2.5 MK II HOUSING W. PCB LOCK



TE Part # 1-1534798-9
DUOPLUG MK II SELECTIVE LOADED



TE Part # 1-1534799-9
DUOPLUG MK II SELECTIVE LOADED



TE Part # 1740526-5
AMP DUOPLUG MARK2 CONNECTOR SELEC LOAD



TE Part # 2-1740918-3
AMP DUOPLUG2.5 MK II HOUSING W. PCB LOCK



TE Part # 3-1534799-1
AMP DUOPLUG MK2 CONNECTOR 11P SELECTIVE



TE Part # 4-1534799-1
AMP DUOPLUG MARK II CONNECTOR SELE.LOAD



TE Part # 4-1534799-3
AMP DUOPLUG MARK II CONNEC. SELEC.LOADED

TE Part # 2304528-3
AMP DUOPLUG MK2 CONNECTOR 13P SELECTIVE

Customers Also Bought



TE Part #1-2178029-2
2P ST-TIMER RED, V0



TE Part #1-2232892-4
4P MONOPLUG 2.5

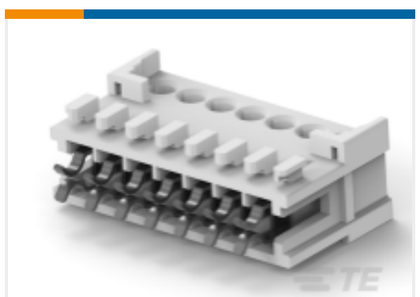

TE Part #1-2232892-7
7P MONOPLUG 2.5



TE Part #1-2232890-7
7P MONOPLUG 2.5 SELECTIVELY LOADED

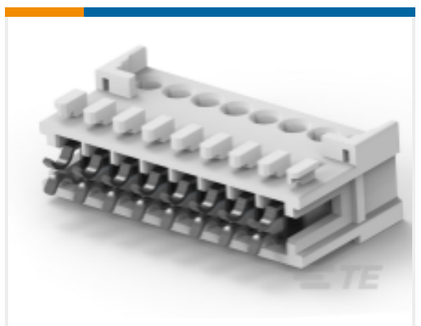

TE Part #1-2232892-8
8P MONOPLUG 2.5

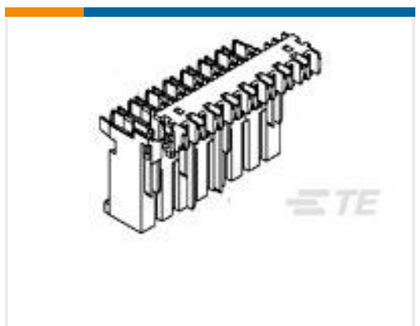

TE Part #1-282002-4
MONO-SHAPE MK I CONN. ASSY TAB 2P



TE Part #1-61795-0
RING 18-14 105-145 #10 025TPBR

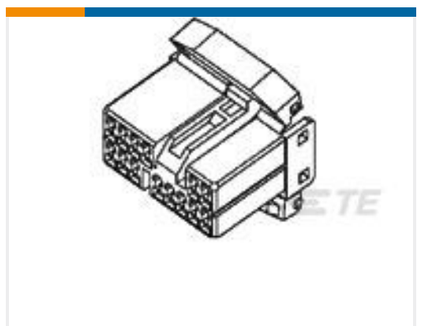

TE Part #917531-1
040 MLC T.F. PLUG HSG 14P NATU



TE Part #1-1969595-4
HSG,REC,FREE-HANGING,GWT, DUALROW,EP2.5



TE Part #170328-3
250 PL MKII REC. 18-14AWG PTBR

Documents

Product Drawings

AMP DUOPLUG MARK II CONNEC.SELEC.LOADED

English

CAD Files

3D PDF

3D

Customer View Model

ENG_CVM_CVM_3-1534799-3_A.2d_dxf.zip

English

Customer View Model

ENG_CVM_CVM_3-1534799-3_A.3d_igs.zip

English

Customer View Model

ENG_CVM_CVM_3-1534799-3_A.3d_stp.zip

English

By downloading the CAD file I accept and agree to the Terms and Conditions of use.

Datasheets & Catalog Pages

1654742_HOUSEHOLD_APPLIANCES_RAST2.5

English

Product Specifications

Application Specification

English

Agency Approvals

VDE Certificate

English