316293-1 ✔ ACTIVE

TE Internal #: 316293-1

Cluster Blocks, Terminal Housing, 3 Circuits, PBT GF, Receptacle, Receptacle, 22 – 15AWG Wire Size, .32 – 1.65mm² Wire Size

View on TE.com >

Terminals & Splices > Terminal Housings, Insulation Sleeves & Blocks > Cluster Blocks



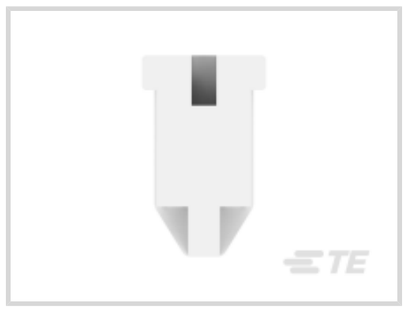



Cluster Block Product Type: **Terminal Housing**

Number of Circuits: **3**

Cluster Block Material: **PBT GF**

Cluster Block Connector Style: **Receptacle**

Terminal & Splice Type: **Receptacle**

Features

Product Type Features

Cluster Block Product Type	Terminal Housing
Applies To	Wire/Cable
Cluster Block Connector Style	Receptacle
Sealable	No
Wire/Cable Type	Lead Wire

Configuration Features

Number of Circuits	3
Number of Positions	3

Body Features

Cluster Block Material	PBT GF
Color	Natural

Contact Features

Accepts Terminal Style	Receptacle
Terminal & Splice Type	Receptacle
Pin Diameter	3.18 mm[.125 in]

Mechanical Attachment

Mount Configuration	1 Forward - 2 Back
Mount Diameter	13.5 mm[.53 in]

Housing Features

Housing Material	PBT GF

Dimensions

Wire Size	.32 – 1.65 mm²
Length	40.6 mm[1.59 in]

Usage Conditions

Operating Temperature Range	-20 – 150 °C[-4 – 302 °F]

Industry Standards

UL Flammability Rating	UL94HB

Packaging Features

Packaging Method	Bag
Packaging Quantity	200

Product Compliance

For compliance documentation, visit the product page on TE.com>

EU RoHS Directive 2011/65/EU	Compliant
EU ELV Directive 2000/53/EC	Compliant
China RoHS 2 Directive MIIT Order No 32, 2016	No Restricted Materials Above Threshold
EU REACH Regulation (EC) No. 1907/2006	Current ECHA Candidate List: JAN 2021 (211) Candidate List Declared Against: JAN 2021 (211) Does not contain REACH SVHC
Halogen Content	Low Halogen - Br, Cl, F, I < 900 ppm per homogenous material. Also BFR/CFR/PVC Free
Solder Process Capability	Not applicable for solder process capability

Product Compliance Disclaimer

This information is provided based on reasonable inquiry of our suppliers and represents our current actual knowledge based on the information they provided. This information is subject to change. The part numbers that TE has identified as EU RoHS compliant have a maximum concentration of 0.1% by weight in homogenous materials for lead, hexavalent chromium, mercury, PBB, PBDE, DBP, BBP, DEHP, DIBP, and 0.01% for cadmium, or qualify for an exemption to these limits as defined in the Annexes of Directive 2011/65/EU (RoHS2). Finished electrical and electronic equipment products

will be CE marked as required by Directive 2011/65/EU. Components may not be CE marked. Additionally, the part numbers that TE has identified as EU ELV compliant have a maximum concentration of 0.1% by weight in homogenous materials for lead, hexavalent chromium, and mercury, and 0.01% for cadmium, or qualify for an exemption to these limits as defined in the Annexes of Directive 2000/53/EC (ELV). Regarding the REACH Regulation, the information TE provides on SVHC in articles for this part number is based on the latest European Chemicals Agency (ECHA) 'Guidance on requirements for substances in articles' posted at this URL: https://echa.europa.eu/guidance-documents/guidance-on-reach

Compatible Parts



TE Part # 316292-1
3.2 CLUSTER REC L-TYPE



TE Part # 316293-3
3.2 CLUSTER BLOCK HSG, LCP TYPE

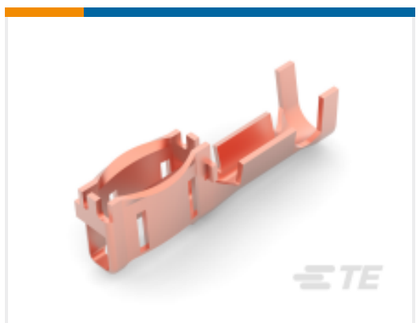

TE Part # 316294-1
3.2 CLUSTER REC S-TYPE

Customers Also Bought



TE Part #926681-3
12P UNIV.CAP HSG.

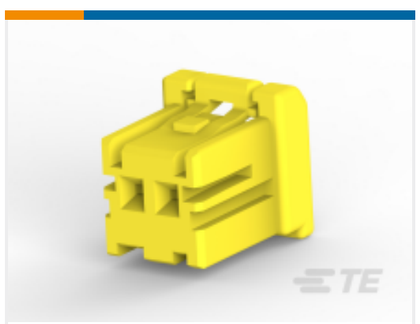

TE Part #1-1747066-4
STD Temp Sig GRACE INERTIA Plug

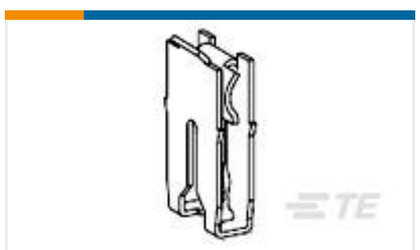

TE Part #1217355-1
MAG-MATE TERM 16-15 0157 TPNBR



TE Part #1-1747066-2
GRACE INERTIA CONN 2.5 PLUG HSG 2P RED



TE Part #1-917484-2
DYNAMIC 3000 CONTACT



TE Part #1-1376477-3
2.5MM PITCH SIGNAL MATE CONN

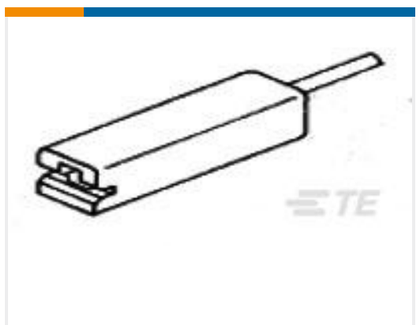

TE Part #1-480417-0
110 FASTON HSG.,REC.,1 POS, NATRUAL



TE Part #1-170140-2
187 FASTON,FLAG,REC.,16-20 AWG, TPPHBZ

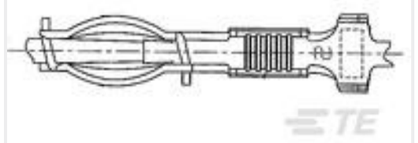

TE Part #1123655-1
2.3 DIA CLUSTER AMPLIVER S TIN



TE Part #1-1473369-4
SQUIB 11DIA SCR ASSY 8.8MM TYPE

Documents

Product Drawings

3.2 CLUSTER BLOCK HSG NATURAL

English

CAD Files

3D PDF

3D

Customer View Model

ENG_CVM_CVM_316293-1_F.2d_dxf.zip

English

Customer View Model

ENG_CVM_CVM_316293-1_F.3d_igs.zip

English

Customer View Model

ENG_CVM_CVM_316293-1_F.3d_stp.zip

English

By downloading the CAD file I accept and agree to the Terms and Conditions of use.

Datasheets & Catalog Pages

Magnet Wire Terminals & Splices

English

Product Specifications

3.2DIA Cluster Receptacle

English

Application Specification

English

Product Environmental Compliance

MD_316293-1_10142014919_dmtec

English

Agency Approvals

UL Report

English