927854-2 ✔ ACTIVE

Positive Lock | Positive Lock 250

TE Internal #: 927854-2

Positive Lock 250, Quick Disconnects, Receptacle, 17 – 13AWG Wire Size, 1.03 – 2.62mm² Wire Size, Quick Disconnect Mating Tab Width 6.35 mm [.25 in]

View on TE.com >

Terminals & Splices > Quick Disconnects

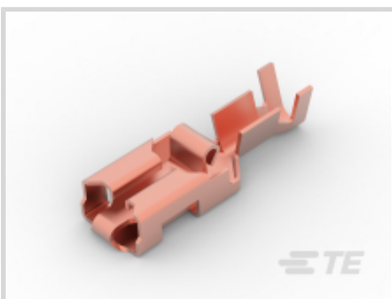

Terminal & Splice Type: **Receptacle**

Wire Size: **1.03 – 2.62 mm²**

Quick Disconnect Mating Tab Width: **6.35 mm [.25 in]**

Quick Disconnect Mating Tab Thickness: **.81 mm [.032 in]**

Features

Product Type Features

Wire Stop	No
Wire/Cable Type	FLK
Terminates To	Wire & Cable
Quick Disconnect Insertion Force	Low
Sealable	No
Insulated	No

Configuration Features

Connection Capacity	Single

Body Features

Fully Insulated	No
Quick Disconnect Plating Material	Unplated

Contact Features

Terminal Type	Receptacle
Terminal & Splice Type	Receptacle

Quick Disconnect Terminal Orientation	Straight
Contact Base Material	Brass
Crimp Type	F-Crimp
Barrel Type	Open

Mechanical Attachment

Mating Retention Type	Dimple
Extraction Force	7 – 100 Newton
Wire Insulation Support	With

Dimensions

Accepts Wire Insulation Diameter Range	2.11 – 3.1 mm[.083 – .122 in]
Overall Length	22.3 mm[.878 in]
Receptacle Terminal Stock Thickness	.41 mm[.016 in]
Wire Size	1.03 – 2.62 mm²
Quick Disconnect Mating Tab Width	6.35 mm[.25 in]
Quick Disconnect Mating Tab Thickness	.81 mm[.032 in]

Usage Conditions

Insulation Requirement	Uninsulated
Operating Temperature Range	-40 – 110 °C[-40 – 230 °F]

Industry Standards

UL Rating	Recognized

Packaging Features

Packaging Quantity	4500
Quick Disconnect Packaging Method	Strip/Reel

Other

Comment	FLKr-Wire: Thin Walled Wire

Product Compliance

For compliance documentation, visit the product page on TE.com>

EU RoHS Directive 2011/65/EU	Compliant
EU ELV Directive 2000/53/EC	Compliant
China RoHS 2 Directive MIIT Order No 32, 2016	No Restricted Materials Above Threshold
EU REACH Regulation (EC) No. 1907/2006	

	Current ECHA Candidate List: JAN 2021 (211) Candidate List Declared Against: JAN 2021 (211) Does not contain REACH SVHC
Halogen Content	Low Halogen - Br, Cl, F, I < 900 ppm per homogenous material. Also BFR/CFR/PVC Free
Solder Process Capability	Not applicable for solder process capability

Product Compliance Disclaimer

This information is provided based on reasonable inquiry of our suppliers and represents our current actual knowledge based on the information they provided. This information is subject to change. The part numbers that TE has identified as EU RoHS compliant have a maximum concentration of 0.1% by weight in homogenous materials for lead, hexavalent chromium, mercury, PBB, PBDE, DBP, BBP, DEHP, DIBP, and 0.01% for cadmium, or qualify for an exemption to these limits as defined in the Annexes of Directive 2011/65/EU (RoHS2). Finished electrical and electronic equipment products will be CE marked as required by Directive 2011/65/EU. Components may not be CE marked. Additionally, the part numbers that TE has identified as EU ELV compliant have a maximum concentration of 0.1% by weight in homogenous materials for lead, hexavalent chromium, and mercury, and 0.01% for cadmium, or qualify for an exemption to these limits as defined in the Annexes of Directive 2000/53/EC (ELV). Regarding the REACH Regulation, the information TE provides on SVHC in articles for this part number is based on the latest European Chemicals Agency (ECHA) 'Guidance on requirements for substances in articles' posted at this URL: https://echa.europa.eu/guidance-documents/guidance-on-reach

Compatible Parts

TE Part # 2305570-1
TERMINAL CUTTER, SIDE FEED

TE Part # 724659-2
EXT TOOL FOR POSITIVE .250

TE Part # 626580-1
PL 250 REC 1.0-2.5 MM2 0.35X 26.54 BR

TE Part # 1380089-1
PL MKIII L.I.F 250 REC>1.0/2.5 MM2 BR

TE Part # 2-2151107-2
OCEAN_2.0_APPLICATOR-S-110F140OV

TE Part # 2151107-2
OCEAN_2.0_APPLICATOR-S-110F140OV

TE Part # 7-2151107-2
OCEAN_2.0_APPLICATOR-S-110F140OV

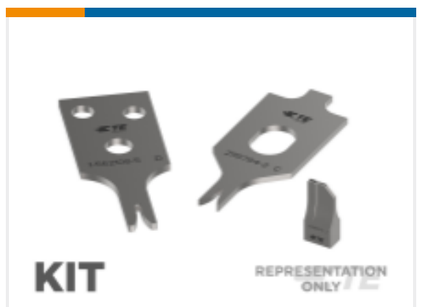

TE Part # 7-2151107-7
OCEAN_2.0_SPARE_PART_KIT-110F140OV

TE Part # 169400

CERTI-LOK

TE Part # 734469

MATRIZENPAAR

Also in the Series | Positive Lock 250

Automotive Terminals(1)

Crimp Terminal Housings(203)

Insertion & Extraction Tools(3)

Insulation Boots & Sleeves(6)

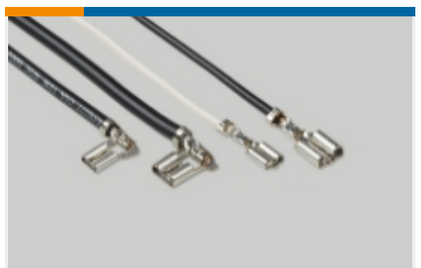

Quick Disconnects(189)

Customers Also Bought

TE Part #1-1823440-3

LEAVYSEAL HOUSINGS

TE Part #969040-1

TIMER, RECEPTACLE AND TAB

TE Part #1394915-1

MQS, CONNECTOR HOUSING

TE Part #1-963616-1

REC CONN CVR ASSY,18POS,MQS

TE Part #1-1355132-1

ABDECKKAPPE 94P,SW

TE Part #1394908-1

COVER FOR 60POS 180DEG

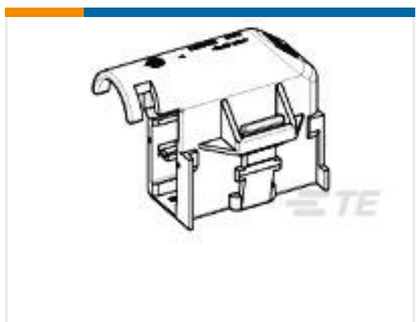

TE Part #1534099-1

MQS COVER 2X10P

TE Part #1534112-2

MQS RETAINER FOR 2POS REC.HSG

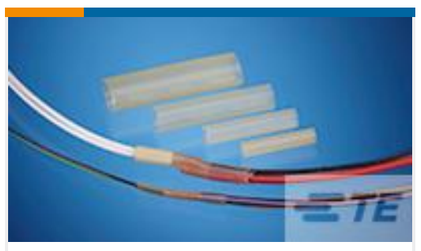

TE Part #0838016004
RBK-VWS-125-NR1-X-28MM

Documents

Product Drawings

PL 250 REC TERMINAL 17-13 AWG PBR

English

CAD Files

3D PDF

3D

Customer View Model

ENG_CVM_CVM_927854-2_G.2d_dxf.zip

English

Customer View Model

ENG_CVM_CVM_927854-2_G.3d_igs.zip

English

Customer View Model

ENG_CVM_CVM_927854-2_G.3d_stp.zip

English

By downloading the CAD file I accept and agree to the Terms and Conditions of use.

Datasheets & Catalog Pages

1654742_HOUSEHOLD_APPLIANCES_RAST5

English

Product Specifications

6,3mm Positiv Lock Kontakt

English

Application Specification

English