102681-2 ✔ ACTIVE

AMPMODU

TE Internal #: 102681-2

PCB Connector Covers, Cover, 14 Position, 2.54mm [.1in] Centerline, Thermoplastic, Low Product Profile, Latching

View on TE.com >

Connectors > PCB Connectors > PCB Connector Accessories > Protection & Strain Relief > PCB Connector Covers

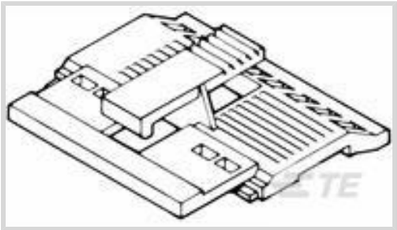

Protection & Strain Relief Accessory Type: **Cover**

Number of Positions: **14**

Centerline (Pitch): **2.54 mm [.1 in]**

Primary Product Material: **Thermoplastic**

Product Profile: **Low**

Features

Product Type Features

Protection & Strain Relief Accessory Type	Cover
Product Profile	Low
Connector Cover Type	Latching
Sealable	No

Configuration Features

Number of Positions	14

Body Features

Connector Cover Side	Front
Primary Product Color	Black
Primary Product Material	Thermoplastic

Housing Features

Centerline (Pitch)	2.54 mm[.1 in]

Usage Conditions

Operating Temperature Range	-65 – 105 °C[-85 – 221 °F]

Industry Standards

UL Flammability Rating	UL 94V-0

Product Compliance

For compliance documentation, visit the product page on TE.com>

EU RoHS Directive 2011/65/EU	Compliant
EU ELV Directive 2000/53/EC	Compliant
China RoHS 2 Directive MIIT Order No 32, 2016	No Restricted Materials Above Threshold
EU REACH Regulation (EC) No. 1907/2006	Current ECHA Candidate List: JAN 2021 (211) Candidate List Declared Against: JUN 2020 (209) SVHC > Threshold: Not Yet Reviewed
Halogen Content	Not Low Halogen - contains Br or Cl > 900 ppm.
Solder Process Capability	Not applicable for solder process capability

Product Compliance Disclaimer

This information is provided based on reasonable inquiry of our suppliers and represents our current actual knowledge based on the information they provided. This information is subject to change. The part numbers that TE has identified as EU RoHS compliant have a maximum concentration of 0.1% by weight in homogenous materials for lead, hexavalent chromium, mercury, PBB, PBDE, DBP, BBP, DEHP, DIBP, and 0.01% for cadmium, or qualify for an exemption to these limits as defined in the Annexes of Directive 2011/65/EU (RoHS2). Finished electrical and electronic equipment products will be CE marked as required by Directive 2011/65/EU. Components may not be CE marked. Additionally, the part numbers that TE has identified as EU ELV compliant have a maximum concentration of 0.1% by weight in homogenous materials for lead, hexavalent chromium, and mercury, and 0.01% for cadmium, or qualify for an exemption to these limits as defined in the Annexes of Directive 2000/53/EC (ELV). Regarding the REACH Regulation, the information TE provides on SVHC in articles for this part number is based on the latest European Chemicals Agency (ECHA) 'Guidance on requirements for substances in articles' posted at this URL: https://echa.europa.eu/guidance-documents/guidance-on-reach

Compatible Parts

TE Part # 102394-5
14 AMP MODU MT HSG DR .100CL

Customers Also Bought

TE Part #917764-1
Signal Double Lock Tab

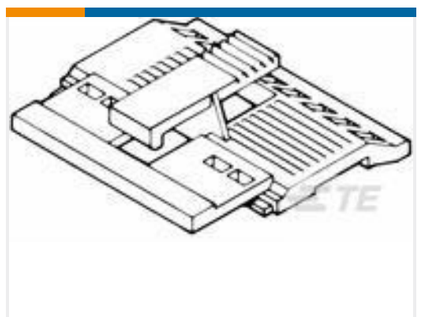

TE Part #1-102681-2
34 AMPMODU MT COVER DR .100CL

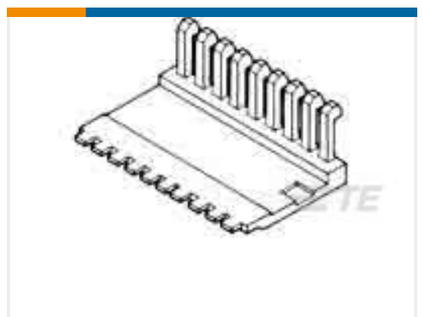

TE Part #102536-7
18 AMPMODU MT COVER DR .100CL

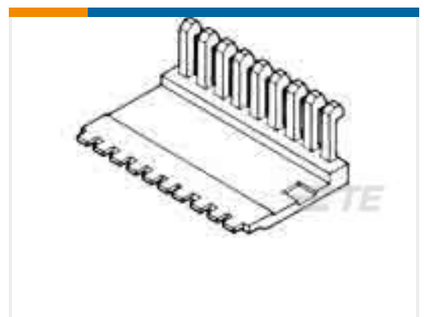

TE Part #1-102536-5
34 AMPMODU MT COVER DR .100CL

TE Part #102394-5
14 AMP MODU MT HSG DR .100CL

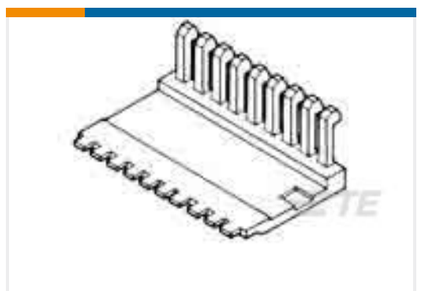

TE Part #102536-4
12 AMPMODU MT COVER DR .100CL

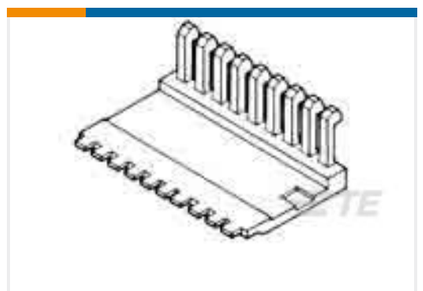

TE Part #1-102536-3
30 AMPMODU MT COVER DR .100CL

TE Part #1-6609000-0
CORCOM EEA SERIES IEC FILTERED INLETS

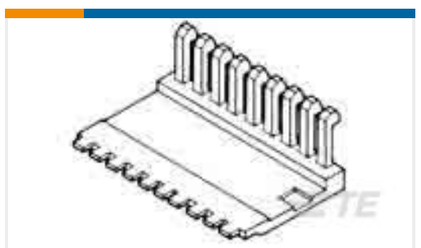

TE Part #102536-5
14 AMPMODU MT COVER DR .100CL

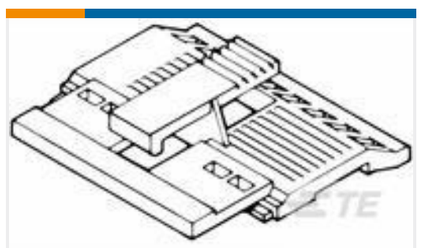

TE Part #1-102681-0
30 AMPMODU MT COVER DR .100CL

Documents

Product Drawings

14 AMPMODU MT COVER DR .100CL

English

CAD Files

3D PDF

3D

Customer View Model

ENG_CVM_CVM_102681-2_P.2d_dxf.zip

English

Customer View Model

ENG_CVM_CVM_102681-2_P.3d_igs.zip

English

Customer View Model

ENG_CVM_CVM_102681-2_P.3d_stp.zip

English

By downloading the CAD file I accept and agree to the Terms and Conditions of use.

Datasheets & Catalog Pages

AMPMODU_INTERCONNECTION_SYSTEM_SECTION5_CONT

English

Product Specifications

Application Specification

English