1-1971771-4 SUPERSEDED

Power Triple Lock

TE Internal #: 1-1971771-4

TE Internal Description: PTL 1X4 CAP FREE HANG STD TEMP KEY A NAT

View on TE.com >

Product Compliance

For compliance documentation, visit the product page on TE.com>

EU RoHS Directive 2011/65/EU	Compliant
EU ELV Directive 2000/53/EC	Compliant
China RoHS 2 Directive MIIT Order No 32, 2016	No Restricted Materials Above Threshold
EU REACH Regulation (EC) No. 1907/2006	Current ECHA Candidate List: JAN 2021 (211) Candidate List Declared Against: JUL 2017 (174) SVHC > Threshold: Not Yet Reviewed
Halogen Content	Not Low Halogen - contains Br or Cl > 900 ppm.
Solder Process Capability	Not reviewed for solder process capability

Product Compliance Disclaimer

This information is provided based on reasonable inquiry of our suppliers and represents our current actual knowledge based on the information they provided. This information is subject to change. The part numbers that TE has identified as EU RoHS compliant have a maximum concentration of 0.1% by weight in homogenous materials for lead, hexavalent chromium, mercury, PBB, PBDE, DBP, BBP, DEHP, DIBP, and 0.01% for cadmium, or qualify for an exemption to these limits as defined in the Annexes of Directive 2011/65/EU (RoHS2). Finished electrical and electronic equipment products will be CE marked as required by Directive 2011/65/EU. Components may not be CE marked.Additionally, the part numbers that TE has identified as EU ELV compliant have a maximum concentration of 0.1% by weight in homogenous materials for lead, hexavalent chromium, and mercury, and 0.01% for cadmium, or qualify for an exemption to these limits as defined in the Annexes of Directive 2000/53/EC (ELV). Regarding the REACH Regulations, TE's information on SVHC in articles for this part number is still based on the European Chemical Agency (ECHA) 'Guidance on requirements for substances in articles'(Version: 2, April 2011), applying the 0.1% weight on weight concentration threshold at the finished product level. TE is aware of the European Court of Justice ruling of September 10th, 2015 also known as O5A (Once An Article Always An Article) stating that, in case of 'complex object', the threshold for a SVHC must be applied to both the product as a whole and simultaneously to each of the articles forming part of its composition. TE has evaluated this ruling based on the new ECHA "Guidance on requirements for substances in articles" (June 2017, version 4.0) and will be updating its statements accordingly.

Also in the Series | Power Triple Lock

Insertion & Extraction Tools(1)

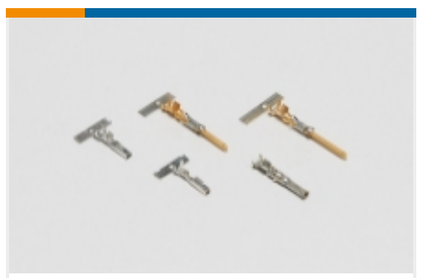

Power Contacts(20)

Rectangular Connector Locking(12)

Rectangular Power Connectors(296)

Customers Also Bought

TE Part #1735482-2
Free Height Receptacle Conn: Board-Board, Vertical, 60, 0.8mm

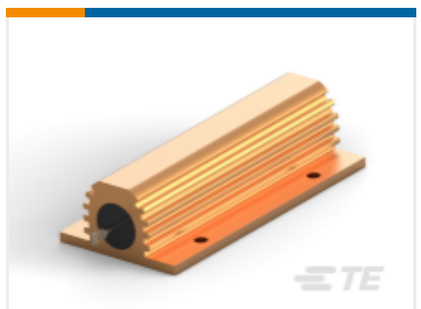

TE Part #3-1630027-2
Power Resistors: Aluminum Housed, HSC

TE Part #926895-7
UNIVERSAL M-N-L SOCKET

TE Part #1614770-4
Resistor Power BDS2A250

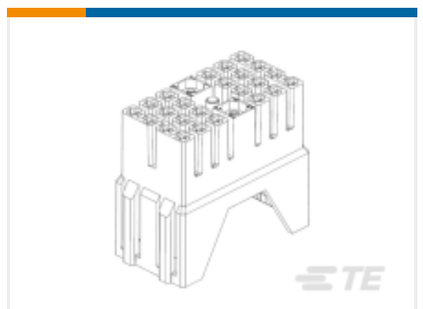

TE Part #284874-1
24 POS PLUG HOUSING ASS'Y

TE Part #4-1393243-2
RT423024

TE Part #55992-1
AMPOWER TERMINAL 2 STUD HOLES

TE Part #1241390-2
AMP MCP, RECEPTACLE AND TAB

TE Part #ASA158F12390235000
623 PLUG

TE Part #ZPF000000000205388
CONTACT FEMALE CAL.20, M12 - FXP

Documents

Product Drawings

PTL 1X4 CAP FREE HANG STD TEMP KEY A NAT

English

CAD Files

3D PDF

3D

Customer View Model

ENG_CVM_CVM_1-1971771-4_D.2d_dxf.zip

English

Customer View Model

ENG_CVM_CVM_1-1971771-4_D.3d_igs.zip

English

Customer View Model

ENG_CVM_CVM_1-1971771-4_D.3d_stp.zip

English

By downloading the CAD file I accept and agree to the Terms and Conditions of use.

Datasheets & Catalog Pages

1-1773734-9 TE Power Triple Lock Quick Reference Guide - German

German

9-1773465-1Power Triple Lock QRG

English

Product Specifications

Application Specification

English

Product Environmental Compliance

TE Material Declaration

English

Instruction Sheets

Instruction Sheet (U.S.)

English

Agency Approvals

UL Report

English