6-1971798-3 ✔ ACTIVE

Grace Inertia | GRACE INERTIA 2.5

TE Internal #: 6-1971798-3

GRACE INERTIA 2.5, PCB Mount Header, Vertical, Wire-to-Board, 6 Position, 2.5mm [.098in] Centerline, 1 Row, Tin, Red Housing Color, Fully Shrouded

View on TE.com >

Connectors > PCB Connectors > Wire-to-Board Connectors > Wire-to-Board Headers & Receptacles > Glow Wire Sig GRACE INERTIA Header

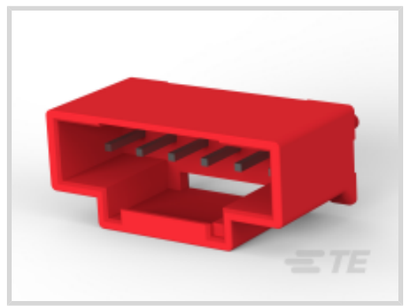
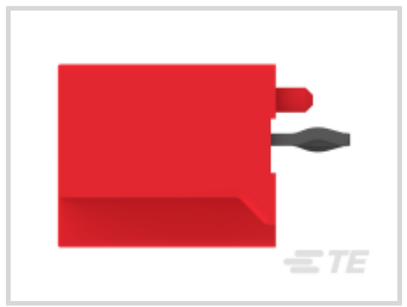




PCB Connector Assembly Type: **PCB Mount Header**

PCB Mount Orientation: **Vertical**

Connector System: **Wire-to-Board**

Number of Positions: **6**

Centerline (Pitch): **2.5 mm [.098 in]**

All Glow Wire Sig GRACE INERTIA Header (39)

Features

Product Type Features

PCB Connector Assembly Type	PCB Mount Header
Connector System	Wire-to-Board
Header Type	Fully Shrouded
Sealable	No
Connector & Contact Terminates To	Printed Circuit Board

Configuration Features

Keying Code	C
PCB Mount Orientation	Vertical
Number of Positions	6
Number of Rows	1

Electrical Characteristics

Operating Voltage	50 VAC

Contact Features

Contact Layout	Inline
Mating Square Post Dimension	.5 mm[.02 in]
Contact Retention Within Housing	Without
PCB Contact Termination Area Plating Material Thickness	1 µm[39.37 µin]
Mating Tab Width	.5 mm[.02 in]
Contact Underplating Material Thickness	1.27 µm[50 µin]
PCB Contact Termination Area Plating Material Finish	Matte
Contact Shape & Form	Square
Contact Underplating Material	Nickel
PCB Contact Termination Area Plating Material	Tin
Contact Base Material	Brass
Contact Mating Area Plating Material	Tin
Contact Mating Area Plating Material Finish	Matte
Contact Mating Area Plating Material Thickness	1 µm[39.37 µin]
Contact Type	Tab
Contact Current Rating (Max)	3 A

Termination Features

Rectangular Termination Post & Tail Thickness	.46 mm[.018 in]
Rectangular Termination Post & Tail Width	.5 mm[.02 in]
Termination Post & Tail Length	3 mm[.118 in]
Termination Method to Printed Circuit Board	Through Hole - Solder

Mechanical Attachment

PCB Mount Alignment Type	Locating Posts
Strain Relief	Without
Mating Alignment Type	Keyed
Mating Alignment	With
PCB Mount Retention Type	Kinked
Mating Retention Type	Latch
PCB Mount Alignment	With
Mating Retention	With
PCB Mount Retention	With
Connector Mounting Type	Board Mount

Housing Features

Centerline (Pitch)	2.5 mm[.098 in]
Housing Color	Red
Housing Material	Nylon

Dimensions

Connector Length	17.5 mm[.68 in]
Connector Height	8.8 mm[.34 in]
Connector Width	7.38 mm[.29 in]
PCB Thickness (Recommended)	1.6 mm[.063 in]

Usage Conditions

Operating Temperature Range	-30 – 105 °C[-22 – 221 °F]

Operation/Application

Circuit Application	Signal

Industry Standards

Glow Wire Rating	Glow Wire
UL Flammability Rating	UL 94V-0
Agency/Standard	UL
UL Rating	Recognized
UL File Number	E28476

Packaging Features

Packaging Quantity	750
Packaging Method	Bag/Box

Other

Comment	Mating with 6-1971793-X

Product Compliance

For compliance documentation, visit the product page on TE.com>

EU RoHS Directive 2011/65/EU	Compliant
EU ELV Directive 2000/53/EC	Compliant
China RoHS 2 Directive MIIT Order No 32, 2016	No Restricted Materials Above Threshold
EU REACH Regulation (EC) No. 1907/2006	Current ECHA Candidate List: JAN 2021 (211)

	Candidate List Declared Against: JAN 2021 (211) Does not contain REACH SVHC
Halogen Content	Not Low Halogen - contains Br or Cl > 900 ppm.
Solder Process Capability	Not reviewed for solder process capability

Product Compliance Disclaimer

This information is provided based on reasonable inquiry of our suppliers and represents our current actual knowledge based on the information they provided. This information is subject to change. The part numbers that TE has identified as EU RoHS compliant have a maximum concentration of 0.1% by weight in homogenous materials for lead, hexavalent chromium, mercury, PBB, PBDE, DBP, BBP, DEHP, DIBP, and 0.01% for cadmium, or qualify for an exemption to these limits as defined in the Annexes of Directive 2011/65/EU (RoHS2). Finished electrical and electronic equipment products will be CE marked as required by Directive 2011/65/EU. Components may not be CE marked. Additionally, the part numbers that TE has identified as EU ELV compliant have a maximum concentration of 0.1% by weight in homogenous materials for lead, hexavalent chromium, and mercury, and 0.01% for cadmium, or qualify for an exemption to these limits as defined in the Annexes of Directive 2000/53/EC (ELV). Regarding the REACH Regulation, the information TE provides on SVHC in articles for this part number is based on the latest European Chemicals Agency (ECHA) 'Guidance on requirements for substances in articles' posted at this URL: https://echa.europa.eu/guidance-documents/guidance-on-reach

Compatible Parts

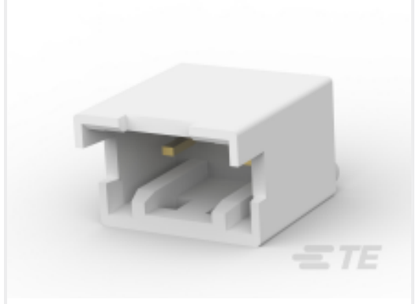

TE Part # CAT-G7534A-H342A
Glow Wire Sig GRACE INERTIA Header

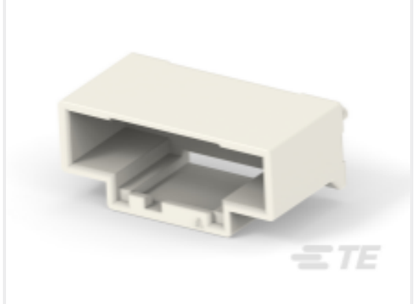

TE Part # 6-1971797-1
NEW GI CONN2.5 HDR HSG 6P NC D1.0



TE Part # 6-1971797-3
NEW GI CONN2.5 HDR HSG 6P RED D1.0

Also in the Series | GRACE INERTIA 2.5



Connector Contacts(2)

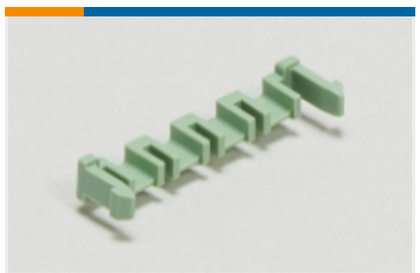

PCB Latches, Locks & Retainers(5)



Rectangular Connector Housings(49)



Rectangular Connector Locking(2)



Rectangular Power Connectors(36)



Wire-to-Board Connector Assemblies & Housings(69)



Wire-to-Board Connector Contacts(4)



Wire-to-Board Headers & Receptacles (138)

Customers Also Bought

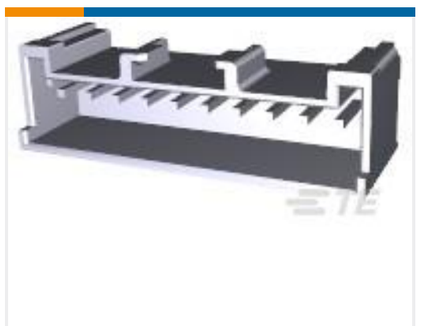

TE Part #917788-1
2.5 S.D.L POST HDR ASY 10P STD

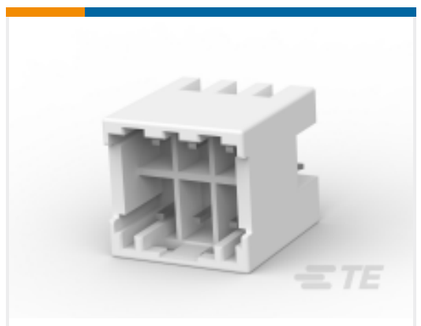

TE Part #1747052-1
Glow Wire GRACE INERTIA Header



TE Part #1747996-2
GHC EYELET 12.4 2POS HEADER ASSY RED



TE Part #179839-1
STD Temp Power Double Lock Header

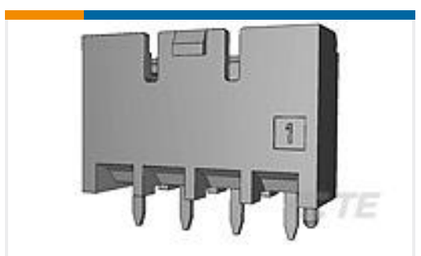

TE Part #1376385-1
5mm B-T-W Conn. 6P HDR ASSEMBL



TE Part #1747996-1
GHC EYELET 12.4 2POS HEADER ASSY NATURAL

Documents

Product Drawings

NEW GI CONN2.5 HDR ASMBLY 6P RED D1.0

English

CAD Files

3D PDF

3D

Customer View Model

ENG_CVM_CVM_6-1971798-3_E_c-6-1971798-3-e.2d_dxf.zip

English

Customer View Model

ENG_CVM_CVM_6-1971798-3_E_c-6-1971798-3-e.3d_igs.zip

English

Customer View Model

ENG_CVM_CVM_6-1971798-3_E_c-6-1971798-3-e.3d_stp.zip

English

By downloading the CAD file I accept and agree to the Terms and Conditions of use.

Datasheets & Catalog Pages

5-1773465-3-GI2.5Flyer

English

7-1773465-8-GI2.5-ChineseFlyer

Product Specifications

Application Specification

English

Agency Approvals

UL Report

English