AV1920P312R04 ✔ ACTIVE

Alcoswitch | Alcoswitch AV19

TE Internal #: 4-2213766-6

Alcoswitch AV19, Push Button Switches, Double Pole - Single Throw Configuration (Pole-Throw), Vandal Resistant, Single Actuator

View on TE.com >

Relays, Contactors & Switches > Switches > Push Button Switches

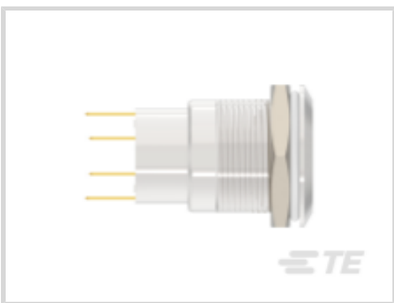

Configuration (Pole-Throw): **Double Pole - Single Throw**

Push Button Switch Product Type: **Vandal Resistant**

Number of Actuators: **Single**

Actuator Profile: **Flush**

Bushing Style: **Threaded**

Features

Product Type Features

Switch Type	Pushbutton
Dust Proof	Yes
Push Button Switch Product Type	Vandal Resistant
Illuminated	Yes
Actuator Style	Round

Configuration Features

ESD Grounding Terminal	Without
Detent Style	Audible
Configuration (Pole-Throw)	Double Pole - Single Throw
Number of Actuators	Single
Snap Action	Without
Support Bracket	Without
Tactile	No
Operating Function	Momentary

Electrical Characteristics

Push Button Switch Voltage Rating	250 VAC

Body Features

Case Material	PBT
Actuator Profile	Flush
Bushing Style	Threaded

Contact Features

Push Button Switch Contact Current Rating	.4 A
Switch Contact Plating Material	Gold

Termination Features

Termination Type	Wire Lugs

Mechanical Attachment

Mounting Angle	Vertical
Push Button Switch Mounting Type	Panel

Housing Features

Process Sealed	Yes

Dimensions

	19 in

Industry Standards

IP Rating	IP67

Product Compliance

For compliance documentation, visit the product page on TE.com>

EU RoHS Directive 2011/65/EU	Compliant with Exemptions
EU ELV Directive 2000/53/EC	Not Yet Reviewed
China RoHS 2 Directive MIIT Order No 32, 2016	Restricted Materials Above Threshold
EU REACH Regulation (EC) No. 1907/2006	Current ECHA Candidate List: JAN 2021 (211) Candidate List Declared Against: JUN 2018 (191) SVHC > Threshold: Pb (3.7% in Component Part) Article Safe Usage Statements: Do not eat, drink or smoke when using this product. Wash thoroughly after handling. Recycle if possible and dispose of the article by following all applicable governmental regulations relevant to your geographic location.
Halogen Content	Low Halogen - Br, Cl, F, I < 900 ppm per

	homogenous material. Also BFR/CFR/PVC Free
Solder Process Capability	Not applicable for solder process capability

Product Compliance Disclaimer

This information is provided based on reasonable inquiry of our suppliers and represents our current actual knowledge based on the information they provided. This information is subject to change. The part numbers that TE has identified as EU RoHS compliant have a maximum concentration of 0.1% by weight in homogenous materials for lead, hexavalent chromium, mercury, PBB, PBDE, DBP, BBP, DEHP, DIBP, and 0.01% for cadmium, or qualify for an exemption to these limits as defined in the Annexes of Directive 2011/65/EU (RoHS2). Finished electrical and electronic equipment products will be CE marked as required by Directive 2011/65/EU. Components may not be CE marked.Additionally, the part numbers that TE has identified as EU ELV compliant have a maximum concentration of 0.1% by weight in homogenous materials for lead, hexavalent chromium, and mercury, and 0.01% for cadmium, or qualify for an exemption to these limits as defined in the Annexes of Directive 2000/53/EC (ELV). Regarding the REACH Regulations, TE's information on SVHC in articles for this part number is still based on the European Chemical Agency (ECHA) 'Guidance on requirements for substances in articles'(Version: 2, April 2011), applying the 0.1% weight on weight concentration threshold at the finished product level. TE is aware of the European Court of Justice ruling of September 10th, 2015 also known as O5A (Once An Article Always An Article) stating that, in case of 'complex object', the threshold for a SVHC must be applied to both the product as a whole and simultaneously to each of the articles forming part of its composition. TE has evaluated this ruling based on the new ECHA "Guidance on requirements for substances in articles" (June 2017, version 4.0) and will be updating its statements accordingly.

Compatible Parts

TE Part # 2213763-1
AV19 SPM 5A NO LED

TE Part # 3-2213766-7
AV19 SPL 5A POWER LED BLUE 12V

TE Part # 2213763-5
AV19 DPM 5A NO LED

TE Part # 2213763-7
AV19 DPL 5A NO LED

TE Part # 2213767-3
AV19 SPM 5A MOVE RING LED WHITE 24V

Also in the Series | Alcoswitch AV19

Push Button Switches(472)

Customers Also Bought

TE Part #K1158023
Protective Cover, Push Button Switch, Round Style

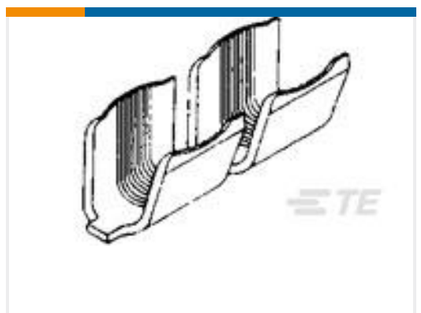

TE Part #42779-1
SPLICE AMPLIVAR 3000-7000

TE Part #2205066-1
CA MICRO-MATCH MOW-MOW 16POS

TE Part #2329388-2
PB OFF/ON FC BLK M1 TERM RED LED IP68 50

TE Part #6-1879221-2
CPF 0603 6R49 0.1% 25PPM 1K RL

TE Part #5-1879221-6
CPF 0603 5R62 0.1% 25PPM 1K RL

TE Part #5-103542-3
08 MODII HDR DRST UNSHRD A/PIN

TE Part #K1152994
Emergency Stop Switch, 1 Actuator, Flush, Threaded Bushing

TE Part #BSA896F0985202A000
917 PLUG

TE Part #YDTS33F21RV0010000
DTS CAP ASSY, NICKEL, SIZE 21 RCPT

Documents

Product Drawings

AV19 DPM 0.4VA POWER LED RED 12V

English

CAD Files

3D PDF

3D

Customer View Model

ENG_CVM_CVM_4-2213766-6_A.2d_dxf.zip

English

Customer View Model

ENG_CVM_CVM_4-2213766-6_A.3d_igs.zip

English

Customer View Model

ENG_CVM_CVM_4-2213766-6_A.3d_stp.zip

English

By downloading the CAD file I accept and agree to the Terms and Conditions of use.

Agency Approvals

UL Report

English