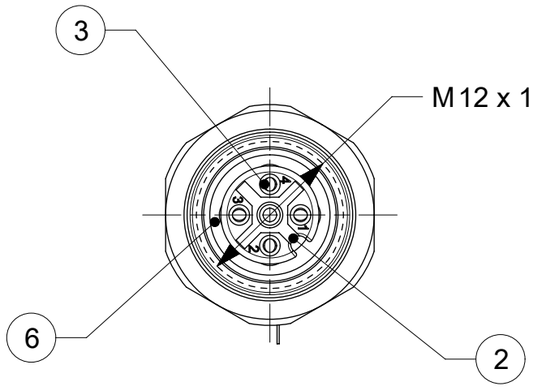


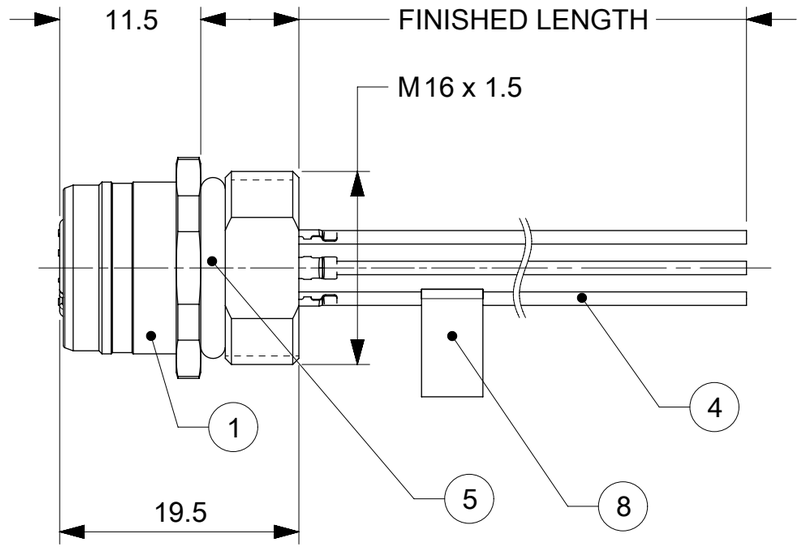


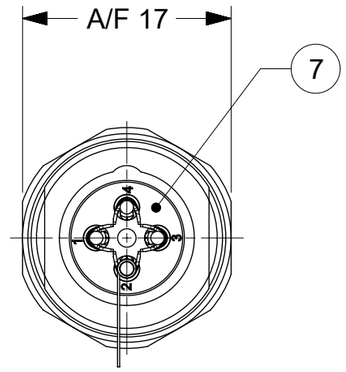


Panel Cutout:

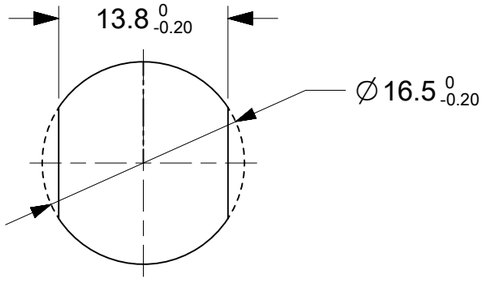


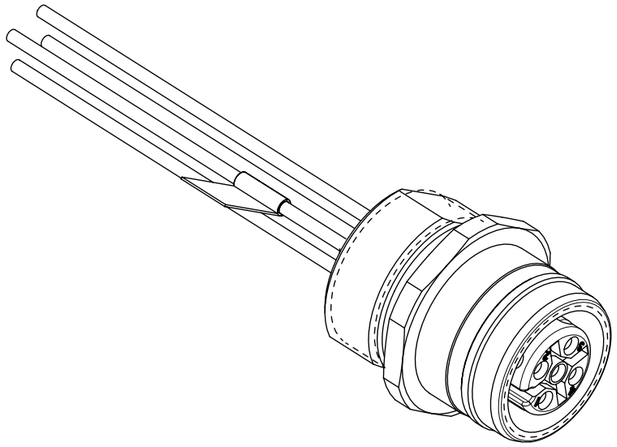

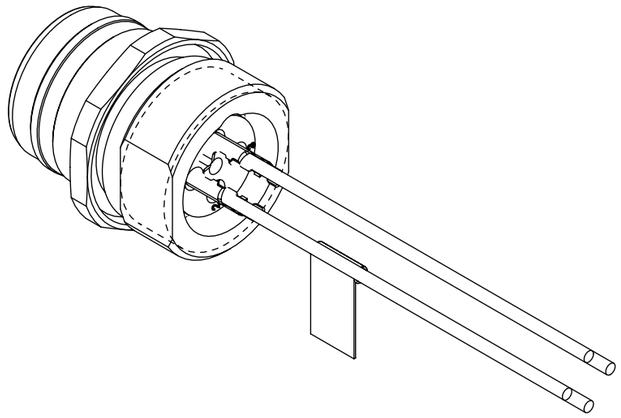

NOTE :

1. POS. 8 LABEL - ON WHITE WIRE FOR 4 POL. VERSIONS
   - ON GREEN/YELLOW OR GREY WIRE FOR 5 AND 8 POL, VERSIONS
   - NO LABEL FOR 12 POL. VERSIONS

# TABLE 1

| ITEM | COMPONENT | MATERIAL | FINISH |
|---|---|---|---|
| 1 | REC SHELL | BRASS | NICKEL PLATED |
| 2 | INSERT | PUR | BLACK |
| 3 | CONTACT | BRASS /GOLD | CuZn Ni/Au |
| 4 | WIRES | COPPER/PVC | NONE |
| 5 | O-RING | NBR | BLACK |
| 6 | O-RING | VITON | RED |
| 7 | POTTING MATERIAL | WEVO | NONE |
| 8 | LABEL | - | YELLOW |

| DOCUMENT STATUS | P1 | RELEASE DATE | 2020/12/10 14:10:45 |
|---|---|---|---|

THIS DRAWING CONTAINS INFORMATION THAT IS PROPRIETARY TO MOLEX ELECTRONIC TECHNOLOGIES, LLC AND SHOULD NOT BE USED WITHOUT WRITTEN PERMISSION

SYMBOLS: EA = 0; EC = 0; EF = 0; S = 0; ▼ = 0; C = 0; ☒ = 0; ■ = 0; ▽ = 0

| DIMENSION UNITS | SCALE |
|---|---|
| mm | 2:1 |

GENERAL TOLERANCES (UNLESS SPECIFIED)

| | | |
|---|---|---|
| ANGULAR TOL | ± | 1.0 ° |
| 4 PLACES | ± | |
| 3 PLACES | ± | |
| 2 PLACES | ± | 0.05 |
| 1 PLACE | ± | 0.3 |
| 0 PLACES | ± | 0.5 |

DRAFT WHERE APPLICABLE MUST REMAIN WITHIN DIMENSIONS

CURRENT REV DESC:

EC NO: 651095
DRWN: SSM 2020/11/26
CHK'D: RSILLER 2020/12/10
APPR: RSILLER 2020/12/10

INITIAL REVISION:
DRWN: SSM 2017/09/26
APPR: RSILLER 2017/12/15

THIRD ANGLE PROJECTION | DRAWING: A3-SIZE | SERIES: 120084

molex

REC U12 XP AC FE XM M16 FM WIR BRA AU

PRODUCT CUSTOMER DRAWING

| DOCUMENT NUMBER | DOC TYPE | DOC PART | REVISION |
|---|---|---|---|
| 1200845107 | PSD | 000 | A5 |

| MATERIAL NUMBER | CUSTOMER | SHEET NUMBER |
|---|---|---|
| SEE SHEET 3 | GENERAL MARKET | 1 OF 3 |

FORMAT: master-Sheet-A3
REVISION: H
DATE: 2018/01/15

## 4 POLE VERSIONS

| PIN | WIRE COLOR |
|---|---|
| 1 | BROWN |
| 2 | WHITE |
| 3 | BLUE |
| 4 | BLACK |

## 5 POLE VERSIONS

| PIN | WIRE COLOR |
|---|---|
| 1 | BROWN |
| 2 | WHITE |
| 3 | BLUE |
| 4 | BLACK |
| 5 | GREEN/YELLOW OR GREY |

## 8 POLE VERSIONS

| PIN | WIRE COLOR |
|---|---|
| 1 | WHITE |
| 2 | BROWN |
| 3 | GREEN |
| 4 | YELLOW |
| 5 | GREY |
| 6 | PINK |
| 7 | BLUE |
| 8 | RED |

## 12 POLE VERSIONS

| PIN | WIRE COLOR |
|---|---|
| 1 | WHITE |
| 2 | BROWN |
| 3 | GREEN |
| 4 | YELLOW |
| 5 | GREY |
| 6 | PINK |
| 7 | BLUE |
| 8 | RED |
| 9 | BLACK |
| 10 | VIOLET |
| 11 | GRAY/PINK |
| 12 | RED/BLUE |

TABLE 3

| POLES | 4 POLE | 5 POLE | 8 POLE | 12 POLE |
|---|---|---|---|---|
| LAYOUT | 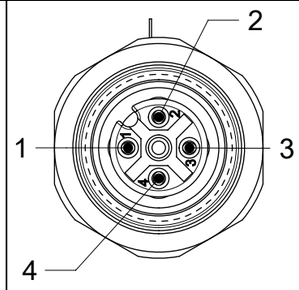 | 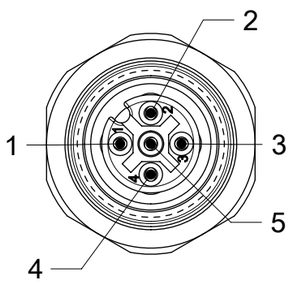 | 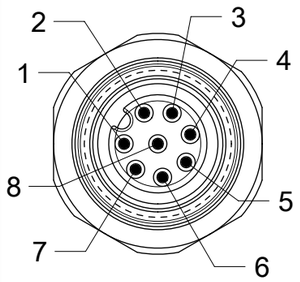 | 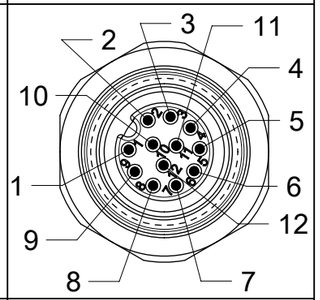 |
| VOLTAGE RATING | 250V | 60V | 30V | 30V |
| CODING | A - Code | A - Code | A - Code | A - Code |
| AMPERE RATING | 4A | 4A | 2A | 1.5A |
| PROTECTION CLASS CONNECTOR INTERFACE SHELL TO ENCLOSURE | IP 67/69K (in mated condition / when properly installed) | | | |
| OPERATING TEMP. | -25°C / 85°C | | | |
| CSA CERTIFICATION | FILE NO. LR6837 | | | |
| WIRE LEAD | 0.34 mm² PVC | 0.34 mm² PVC | 0.25 mm² PVC | 0.14 mm² PVC |
| PIN DIAMETER | 1.0 mm | 1.0 mm | 0.8 mm | 0.6 mm |
| WIRE COLOR | ACCORDING TO IEC 60947-5-2 | | ACCORDING TO DIN 47100 | |

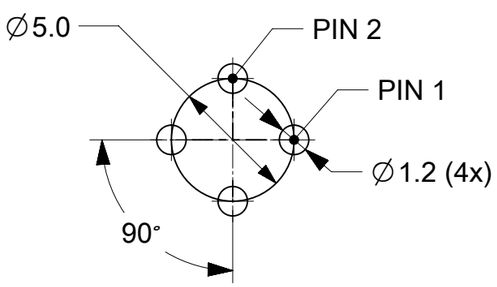


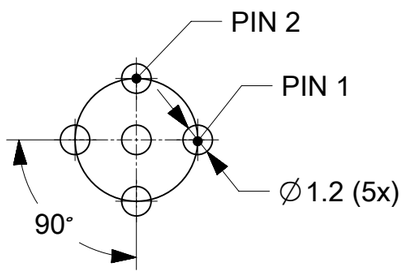


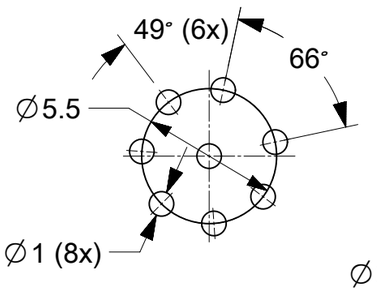


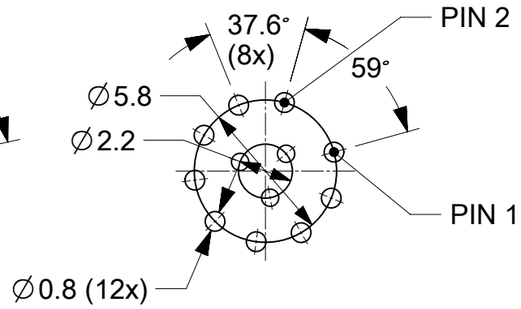


# DRILL LAYOUT BACKSIDE

THIS DRAWING CONTAINS INFORMATION THAT IS PROPRIETARY TO MOLEX ELECTRONIC TECHNOLOGIES, LLC AND SHOULD NOT BE USED WITHOUT WRITTEN PERMISSION

SYMBOLS: F = 0; F = 0; F = 0; S = 0; ▼ = 0; C = 0; ☒ = 0; ■ = 0; ▽ = 0

DIMENSION UNITS: mm — SCALE: 2:1

GENERAL TOLERANCES (UNLESS SPECIFIED)

| | | |
|---|---|---|
| ANGULAR TOL | ± | 1.0 ° |
| 4 PLACES | ± | |
| 3 PLACES | ± | |
| 2 PLACES | ± | 0.05 |
| 1 PLACE | ± | 0.3 |
| 0 PLACES | ± | 0.5 |

DRAFT WHERE APPLICABLE MUST REMAIN WITHIN DIMENSIONS

CURRENT REV DESC:

EC NO: 651095
DRWN: SSM 2020/11/26
CHK'D: RSILLER 2020/12/10
APPR: RSILLER 2020/12/10

INITIAL REVISION:
DRWN: SSM 2017/09/26
APPR: RSILLER 2017/12/15

THIRD ANGLE PROJECTION | DRAWING: A3-SIZE | SERIES: 120084

molex

REC U12 XP AC FE XM M16 FM WIR BRA AU

PRODUCT CUSTOMER DRAWING

| DOCUMENT NUMBER | DOC TYPE | DOC PART | REVISION |
|---|---|---|---|
| 1200845107 | PSD | 000 | A5 |

| MATERIAL NUMBER | CUSTOMER | SHEET NUMBER |
|---|---|---|
| SEE SHEET 3 | GENERAL MARKET | 2 OF 3 |

| DOCUMENT STATUS | P1 | RELEASE DATE | 2020/12/10 14:10:45 |
|---|---|---|---|

FORMAT: master_tmpl_v3-A3
REVISION: H
DATE: 2018/01/16

# PART LIST

4 POLE VERSIONS

| MOLEX P/N | ENGINEERING NR. | L [mm] | TOL |
|---|---|---|---|
| 1200845107 | WR4U20E03C3003 | 300 | ±10 |
| 1200250006 | WR4U20E03C300 | 300 | ±10 |
| 1200848085 | WR4U20E03C500 | 500 | ±10 |
| | | | |
| | | | |
| | | | |

5 POLE VERSIONS

| MOLEX P/N | ENGINEERING NR. | L [mm] | TOL | PIN 5 |
|---|---|---|---|---|
| 1200845113 | WR5U20E03C3003 | 300 | ±10 | GN/YE |
| 1200848027 | WR5U20E03C500 | 500 | ±10 | GN/YE |
| 1200848037 | WR5U20E03M020 | 2000 | ±10 | GREY |
| 1200848124 | WR5U20E03M010 | 1000 | ±10 | GN/YE |
| | | | | |
| | | | | |

8 POLE VERSIONS

| MOLEX P/N | ENGINEERING NR. | L [mm] | TOL |
|---|---|---|---|
| 1200845002 | WR8U20E02M010 | 1000 | ±10 |
| 1200845095 | WR8U20E02C300 | 300 | ±10 |
| | | | |
| | | | |
| | | | |

12 POLE VERSIONS

| MOLEX P/N | ENGINEERING NR. | L [mm] | TOL |
|---|---|---|---|
| 1200845012 | WRCU20E01C200 | 200 | ±10 |
| 1200845013 | WRCU20E01C300 | 300 | ±10 |
| | | | |
| | | | |
| | | | |

| DOCUMENT STATUS | P1 | RELEASE DATE | 2020/12/10 14:10:45 |
|---|---|---|---|

FORMAT: master_Sized-A3
REVISION: H
DATE: 2018/01/18

SYMBOLS
E/A = 0
E/C = 0
E/E = 0
S = 0
▼ = 0
C = 0
☒ = 0
■ = 0
▽ = 0

THIS DRAWING CONTAINS INFORMATION THAT IS PROPRIETARY TO MOLEX ELECTRONIC TECHNOLOGIES, LLC AND SHOULD NOT BE USED WITHOUT WRITTEN PERMISSION

| DIMENSION UNITS | SCALE |
|---|---|
| mm | 1:1 |

GENERAL TOLERANCES (UNLESS SPECIFIED)

| | | |
|---|---|---|
| ANGULAR TOL | ± | 1.0 ° |
| 4 PLACES | ± | |
| 3 PLACES | ± | |
| 2 PLACES | ± | 0.05 |
| 1 PLACE | ± | 0.3 |
| 0 PLACES | ± | 0.5 |

DRAFT WHERE APPLICABLE MUST REMAIN WITHIN DIMENSIONS

CURRENT REV DESC:

EC NO: 651095
DRWN: SSM 2020/11/26
CHK'D: RSILLER 2020/12/10
APPR: RSILLER 2020/12/10

INITIAL REVISION:
DRWN: SSM 2017/09/26
APPR: RSILLER 2017/12/15

THIRD ANGLE PROJECTION | DRAWING: A3-SIZE | SERIES: 120084

molex

REC U12 XP AC FE XM M16 FM WIR BRA AU

PRODUCT CUSTOMER DRAWING

| DOCUMENT NUMBER | DOC TYPE | DOC PART | REVISION |
|---|---|---|---|
| 1200845107 | PSD | 000 | A5 |

| MATERIAL NUMBER | CUSTOMER | SHEET NUMBER |
|---|---|---|
| SEE PART LIST | GENERAL MARKET | 3 OF 3 |