Part Number: 1210230278

Status: Active

Overview: mPm DIN Valve Connectors

Description: mPm DIN Valve Connector, Form A-18mm, PG11 Internal Threads, 2 Pole Plus Ground Terminal, 250V AC/300V DC, Black, NBR Profiled Gasket and Screw, Bulk Pack, Mounted

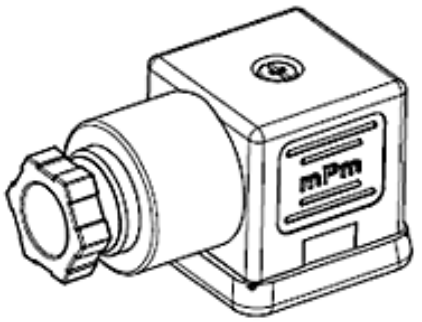

Series image - Reference only

Documents:

Drawing (PDF)
Product Specification STR-1552-001 (PDF)
Packaging Specification PK-121023-C18-001 (PDF)
RoHS Certificate of Compliance (PDF)

General	
Product Family	Field Attachable / Accessories
Series	121023
Form	A - 18mm
IP Rating	IP65
Material - Contact	Brass
Overview	mPm DIN Valve Connectors
Product Name	mPm
Type	Field Attachable Connector
UPC	883906248956
Physical	
Cable Diameter	8.00-10.00mm (0.315-0.394")
Coupling Type	Internal Thread
Diagnostics / LEDs	No
Diagnostics Port	No
Gender	N/A
Keyway	None
Material - Connector Body	Polyamide
Material - Coupling Nut	N/A
Material - Plating Mating	Silver
Net Weight	23.133/g
Orientation	90° Angle
Pitch - Mating Interface	18.00mm
Poles	2
Temperature Range - Operating	-40°C to +90°C
Wire Size AWG	16
Electrical	
Current - Maximum per Contact	16.0A
Voltage - Maximum	250V AC / 300V DC
Material Info	
Engineering Number	C18211N21
Reference - Drawing Numbers	
Packaging Specification	PK-121023-C18-001
Product Specification	STR-1552-001
Sales Drawing	1210230229-000, SD-121023-001-001

EU ELV
Not Relevant

EU RoHS
Compliant with Exemption 6(c)

China RoHS

REACH SVHC
Contained Per - D(2020)9139-DC (19 Jan 2021)
Lead

Halogen-Free Status
Low-Halogen

For more information, please visit Contact US

China ROHS	50 Image
ELV	Not Relevant
RoHS Phthalates	Not Contained

Search Parts in this Series
121023 Series