Part Number: 0345860001
Status: Active
Overview: MX123 Sealed Connection System
Description: MX123 0.64mm Grommet Seal Plug

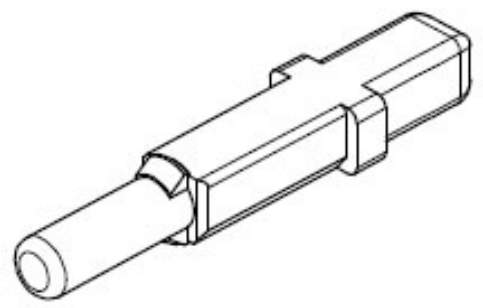

Series image - Reference only

Documents:
Drawing (PDF)
Product Specification PS-34566-0000-001 (PDF)
Packaging Specification PK-31300-348-001 (PDF)
RoHS Certificate of Compliance (PDF)

General

Product Family	Accessories
Series	34586
Application	Automotive
Component Type	Voiding Key
Overview	MX123 Sealed Connection System
Product Name	MX123
UPC	822348345656

Physical

Circuits (Loaded)	1
Circuits (maximum)	1
Color - Resin	Gray
Lock to Mating Part	No
Material - Resin	Nylon Alloy
Net Weight	0.064/g
Packaging Type	Bag

Solder Process Data

Lead-freeProcess Capability	N/A

Material Info

Reference - Drawing Numbers

Packaging Specification	PK-31300-348-001
Product Specification	PS-34566-0000-001
Sales Drawing	SD-34586-001-001

EU ELV
Compliant

EU RoHS
Compliant

China RoHS

REACH SVHC
Not Contained Per - D(2020)9139-DC (19 Jan 2021)

Halogen-Free Status
Low-Halogen

For more information, please visit Contact US

China ROHS	Not Relevant
ELV	Compliant
RoHS Phthalates	Not Contained

Search Parts in this Series
34586 Series

Use With
MX123 Female Receptacle Housing 34566 , 34576