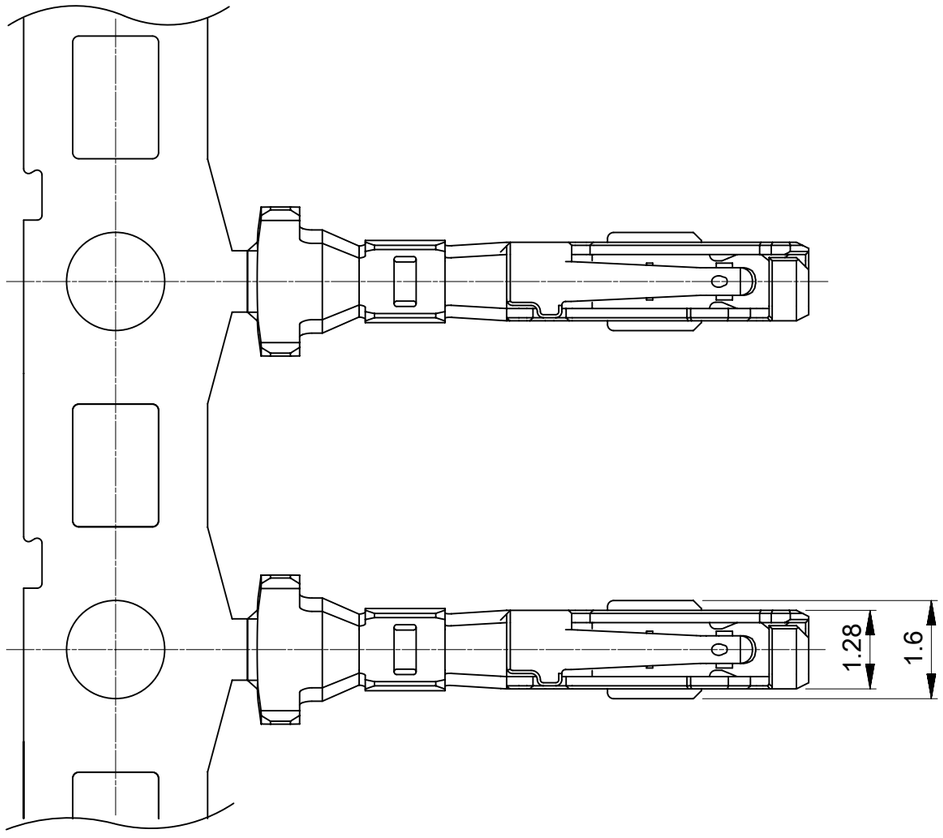

注記
NOTES

1. 材料及び仕上げ(めっき仕様): TABLE1参照
   MATERIAL AND FINISHES: SEE TABLE 1
2. 適合製品及び各種仕様書についてはSHEET2をご参照ください。
   PLEASE REFER TO SHEET 2 FOR APPLICABLE PRODUCT AND VARIOUS SPECIFICATIONS.
3. 本製品はケーブルサイズAWG#26-28に適合です。
   AWG#22-26に適合する製品は5016470000-SD/PSD/000をご参照ください。
   THIS PRODUCT IS APPLICABLE TO AWG#26-28.
   FOR PRODUCTS APPLICABLE TO AWG#22-26, PLEASE REFER TO 5016470000-SD/PSD/000.
4. 本製品は錫めっき品です。金めっき製品は5030950000-SD/PSD/000をご参照ください。
   THIS PRODUCT IS A TIN PLATING.
   PLEASE REFER TO 5030950000-SD/PSD/000 FOR GOLD PLATING PRODUCT.

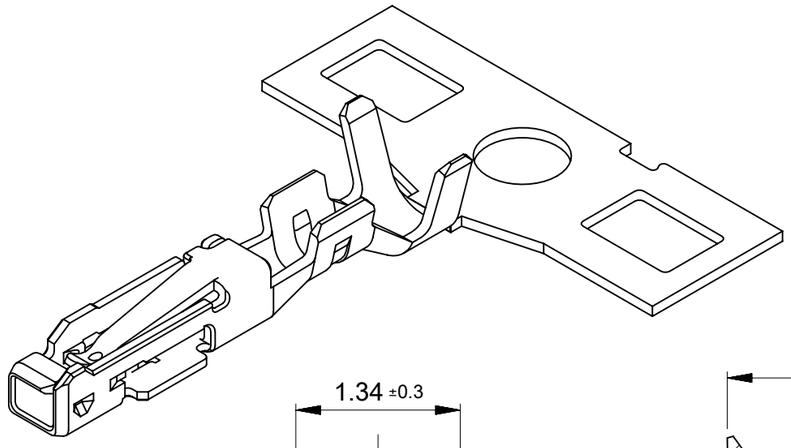

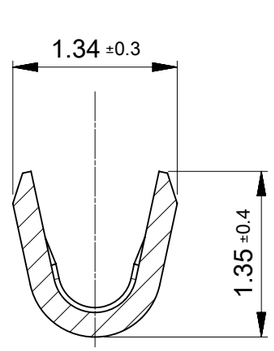

SECTION Z-Z
SCALE 20:1

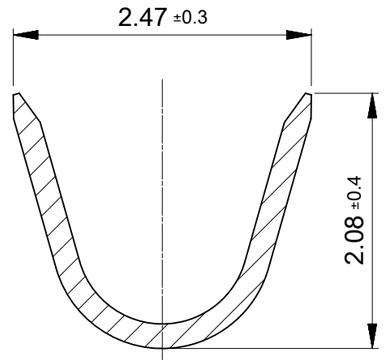

SECTION Y-Y
SCALE 20:1

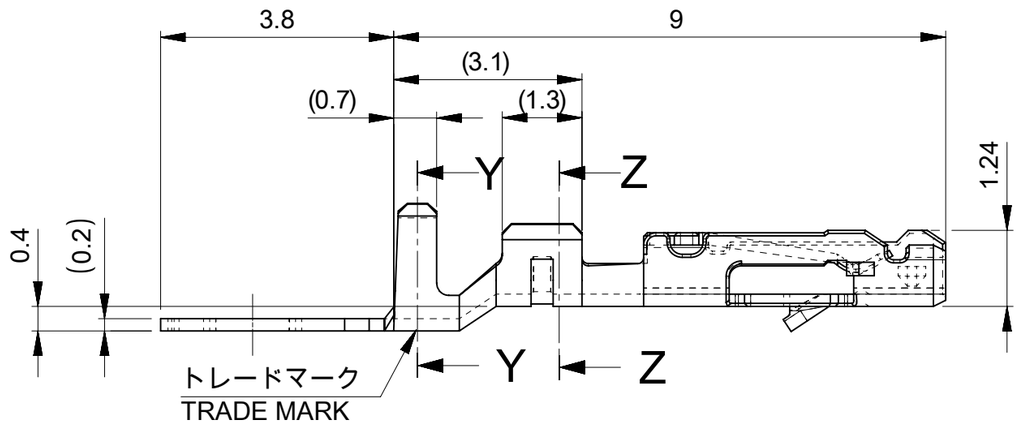

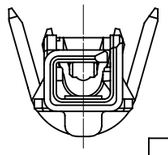

∅0.85-∅1.4mm	AWG#26-28 0.079 ~0.136mm²	ポリ袋 POLY BAG	5016481100	バラ状 LOOSE
		リール REEL	5016481000	連鎖状 CHAIN
絶縁被覆外形範囲 INS, RANGE	適用電線範囲 WIRE RANGE	梱包形態 PACKAGING	オーダー番号　ORDER No.	端子形状 FORM

⚠1 TABLE 1

部品 PART		
ターミナル TERMINAL	材質 MATERIAL	銅合金 COPPER ALLOY
	めっき PLATING	錫めっき : 0.7 micro-meters MIN　リフロー処理(前めっき) MATTE TIN　REFLOW TREATMENT (PRE-PLATING)

DOCUMENT STATUS	P1	RELEASE DATE	2021/08/05　04:16:48

THIS DRAWING CONTAINS INFORMATION THAT IS PROPRIETARY TO MOLEX ELECTRONIC TECHNOLOGIES, LLC AND SHOULD NOT BE USED WITHOUT WRITTEN PERMISSION

DIMENSION UNITS	SCALE
mm	NTS

GENERAL TOLERANCES (UNLESS SPECIFIED)

ANGULAR TOL	±	1.0 °
4 PLACES	±	0.2
3 PLACES	±	0.2
2 PLACES	±	0.2
1 PLACE	±	0.2
0 PLACES	±	0.2

DRAFT WHERE APPLICABLE MUST REMAIN WITHIN DIMENSIONS

CURRENT REV DESC:

EC NO: 672166
DRWN: SNAKAMURA08 2020/09/02
CHK'D: KOMURAKAMI 2021/08/05
APPR: AIDA 2021/08/05

INITIAL REVISION:
DRWN: SNAKAMURA08 2020/09/02
APPR: AIDA 2021/08/05

THIRD ANGLE PROJECTION | DRAWING: A3-SIZE | SERIES: 501648

molex

IGRID 2.0 WIRE TO BOARD CRIMP TERMINAL
TIN PLATING AWG#26-28

PRODUCT CUSTOMER DRAWING

DOCUMENT NUMBER	DOC TYPE	DOC PART	REVISION
5016480000-SD	PSD	000	A

MATERIAL NUMBER	CUSTOMER	SHEET NUMBER
SEE TABLE	GENERAL	1 OF 2

FORMAT: master-lb-prod-A3
REVISION: J
DATE: 2020/01/14

△2 適合製品及び各種仕様書

APPLICABLE PRODUCTS AND VARIOUS SPECIFICATIONS

VARIOUS SPECIFICATIONS	仕様書番号 SPECIFICATION NUMBER
製品仕様書 PRODUCT SPECFICATION	PS-501646-001
取扱説明書 APPLICABLE SPECIFICATION	5016460000/PS/-A00(JAPANESE)/-A01(ENGLISH)
梱包仕様書 PACKING SPECIFICATION	5016489200-SPK/PS/200

適合ハウジング APPLICABLE HOUSING	リセプタクルハウジング RECEPTACLE HOUSING	
シリーズ番号 SERIES No.	501646 SERIES	
適合嵌合相手 MATE WITH	プラグアッセンブリ PLUG ASSEMBLY	
	バーティカルタイプ VERTICAL TYPE	ライトアングルタイプ RIGHT ANGLE TYPE
シリーズ番号 SERIES No.	501645 SERIES	501876 SERIES

製品嵌合図は各"適合嵌合相手"図面参照のこと

MATING VIEW: REFER TO EACH "MATE WITH" PART DRAWING

THIS DRAWING CONTAINS INFORMATION THAT IS PROPRIETARY TO MOLEX ELECTRONIC TECHNOLOGIES, LLC AND SHOULD NOT BE USED WITHOUT WRITTEN PERMISSION

DIMENSION UNITS	SCALE
mm	NTS

GENERAL TOLERANCES (UNLESS SPECIFIED)

ANGULAR TOL	±	1.0 °
4 PLACES	±	0.2
3 PLACES	±	0.2
2 PLACES	±	0.2
1 PLACE	±	0.2
0 PLACES	±	0.2

DRAFT WHERE APPLICABLE MUST REMAIN WITHIN DIMENSIONS

CURRENT REV DESC:

EC NO: 672166
DRWN: SNAKAMURA08 2020/09/02
CHK'D: KOMURAKAMI 2021/08/05
APPR: AIDA 2021/08/05

INITIAL REVISION:
DRWN: SNAKAMURA08 2020/09/02
APPR: AIDA 2021/08/05

THIRD ANGLE PROJECTION | DRAWING: A3-SIZE | SERIES: 501648

molex

IGRID 2.0 WIRE TO BOARD CRIMP TERMINAL
TIN PLATING AWG#26-28

PRODUCT CUSTOMER DRAWING

DOCUMENT NUMBER	DOC TYPE	DOC PART	REVISION
5016480000-SD	PSD	000	A

MATERIAL NUMBER	CUSTOMER	SHEET NUMBER
SEE SHEET 1	GENERAL	2 OF 2

DOCUMENT STATUS	P1	RELEASE DATE	2021/08/05 04:16:48

FORMAT: master-tb-prod-A3
REVISION: J
DATE: 2020/01/14

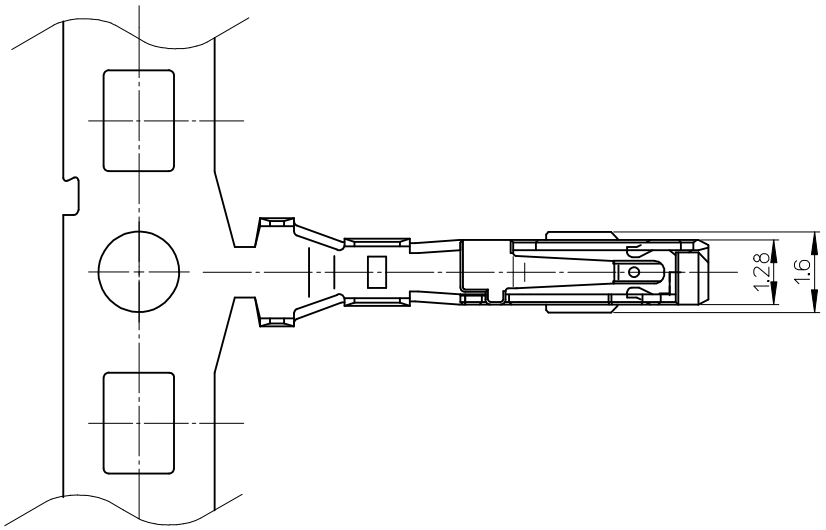

注記
NOTES

1. 使用材料 ： 銅合金，錫メッキ（t＝0.2 ）
   MATERIAL ：REFLOWED TIN COPPER ALLOY
2. 適合ハウジング ： 501646 シリーズ
   APPLICABLE HOUSING ：501646 SERIES
3. 電線仕様
   CABLE SPEC.
   AWG ： #26~28
   適用電線範囲 ：0.079~0.136mm²
   WIRE RANGE
   被覆外形 ： Φ0.85~Φ1.4mm
   INS. RANGE
4. 嵌合相手 MATES WITH

PLUG ST HEADER (TIN PLATING)	501645 SERIES
PLUG R/A HEADER (TIN PLATING)	501876 SERIES

5. ELV 及び RoHS 適合品
   ELV AND RoHS COMPLIANT.

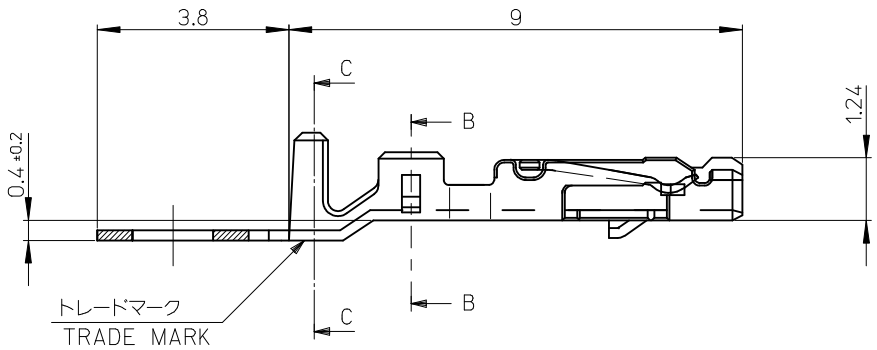

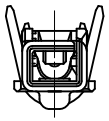

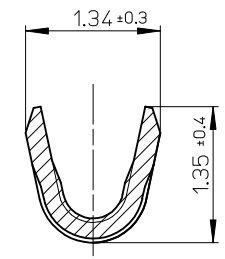

SECTION B-B
(SCALE:20-1)

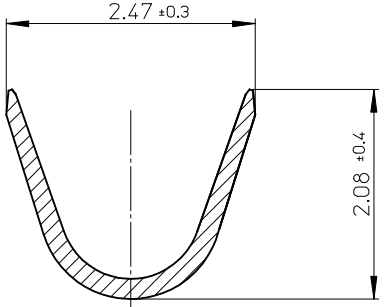

SECTION C-C
(SCALE:20-1)

501648-1100	バラ状 LOOSE
501648-1000	連鎖状 CHAIN
MATERIAL NO.	端子形状 FORM

REVISED
EC NO: J2017-0032 2016/07/04
DRWN:AIDA 2016/07/04
CH'KD:SAKIYAMA 2016/07/12
APPR:IKANEKO
DESCRIPTION
B
REV

GENERAL TOLERANCES (UNLESS SPECIFIED)

0.25	UNDER		UNDER	±0.03
0.25	OVER	0.5	UNDER	±0.05
0.5	OVER	1.0	UNDER	±0.1
1.0	OVER	10	UNDER	±0.2
10	OVER	30	UNDER	±0.25
30	OVER			±0.3
ANGULAR				±1 °

DRAFT WHERE APPLICABLE MUST REMAIN WITHIN DIMENSIONS

DIMENSION STYLE: MM ONLY	SCALE: 10:1	DESIGN UNITS: METRIC	THIRD ANGLE PROJECTION

DRAWN BY: N.ITO	DATE: '05/11/22
CHECKED BY: ASAKAWA	DATE: '05/11/22
APPROVED BY: ICHIKAWA	DATE: '05/11/22
MATERIAL NO.: 501648-1*00	
DOCUMENT NO.: SD-501648-001	SHEET NO.: 1 OF 1

TITLE
IGRID 2.0 W/B DUAL
RCPT TERM
AWG #26 - 28

molex

SIZE A3

THIS DRAWING CONTAINS INFORMATION THAT IS PROPRIETARY TO MOLEX ELECTRONIC TECHNOLOGIES, LLC AND SHOULD NOT BE USED WITHOUT WRITTEN PERMISSION