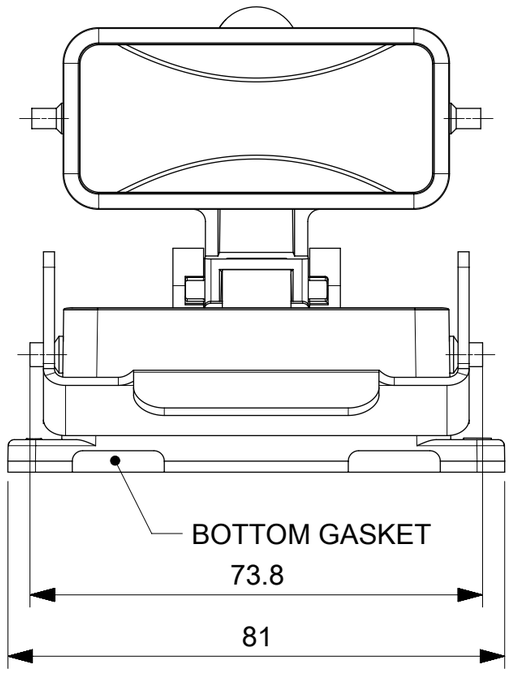

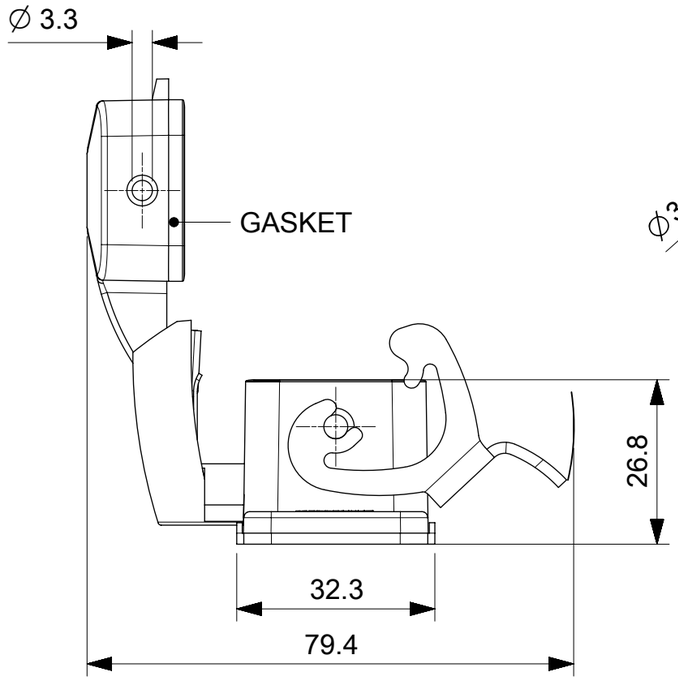

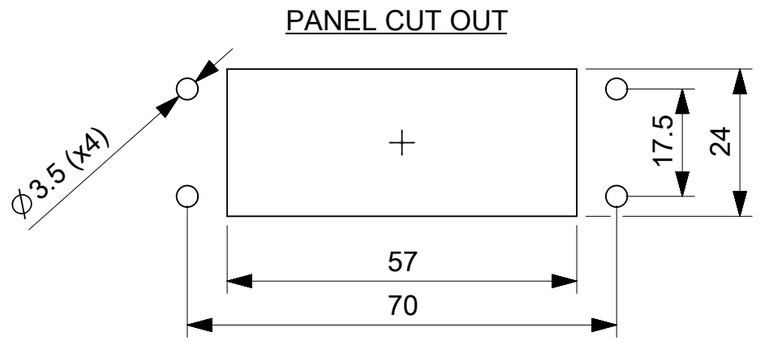

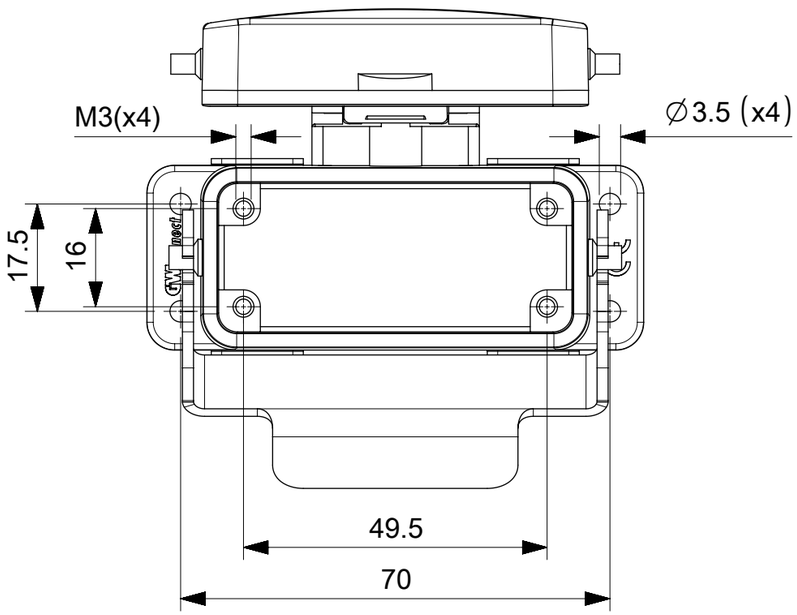

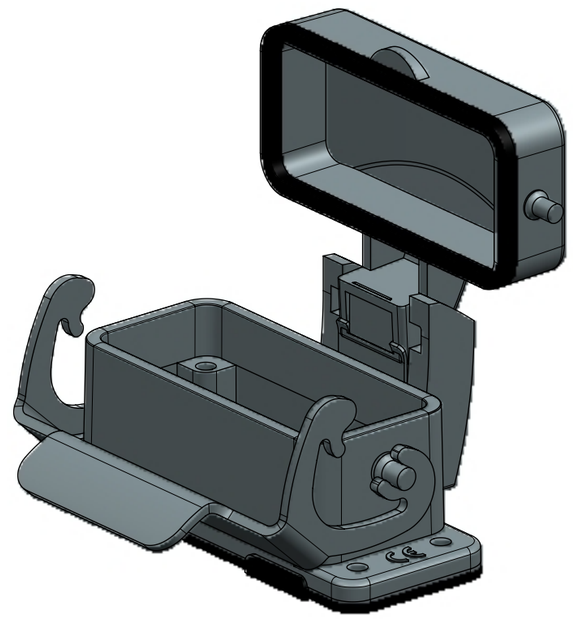

SYMBOLS		
FA = 0	DIMENSION UNITS	SCALE
FC = 0	mm	1:1
FB = 0	GENERAL TOLERANCES (UNLESS SPECIFIED)	
S = 0	ANGULAR TOL	± °
▼ = 0	4 PLACES	±
C = 0	3 PLACES	±
☒ = 0	2 PLACES	±
■ = 0	1 PLACE	±
= 0	0 PLACES	±
	DRAFT WHERE APPLICABLE MUST REMAIN WITHIN DIMENSIONS	

THIS DRAWING CONTAINS INFORMATION THAT IS PROPRIETARY TO MOLEX ELECTRONIC TECHNOLOGIES, LLC AND SHOULD NOT BE USED WITHOUT WRITTEN PERMISSION

CURRENT REV DESC:

EC NO: 173167
DRWN: AKHEMIRI 2018/02/15
CHK'D: DMERONI 2018/02/19
APPR: AMELZI 2018/03/06

INITIAL REVISION:
DRWN: AKHEMIRI 2017/12/19
APPR: AMELZI 2018/03/06

FIRST ANGLE PROJECTION | DRAWING A3-SIZE | SERIES 93601

molex

7810.4542.0
10A STANDARD BULKHEAD HOUSING WITH COVER
1 LEVER

PRODUCT CUSTOMER DRAWING

DOCUMENT NUMBER	DOC TYPE	DOC PART	REVISION
936011165	PSD	000	A

MATERIAL NUMBER	CUSTOMER	SHEET NUMBER
936011165	GENERAL MARKET	1 OF 1

DOCUMENT STATUS	P1	RELEASE DATE	2018/03/06 16:24:42

FORMAT: master-tb-prod-A3
REVISION: H
DATE: 2017/10/06