Data Sheet

SMA socket - BNC plug

Impedance: 50 Ω

Material (details): Brass, nickel plated

Connector type: Adapter, straight

Product type: SMA adapter

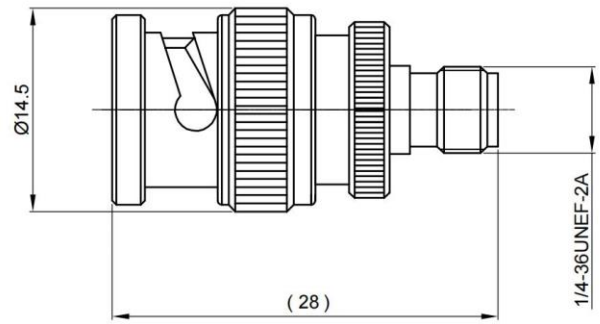

Electric Data
Characteristic Impedance 50ohm
Frequency Range 0-4GHz
Working Voltage 500 VRMS(max at sea level)
Dielectric Withstanding Voltage 1500 VRMS(min at sea level)
VSWR "≤1.3"
Contact Resistance "Inner: 1.5 milliohms(max)
Outer: 1 milliohms(max)"
Insulation Resistance 5000 megohms(min)

RoSH COMPLIANCE

NO.	Description	Q'TY	Material	Treatment
3	Contact Pin	1	Phosphor bronze	Gold 0.05um
2	Front Insulator	1	Teflon & PTFE	_____
1	Body	1	Brass	Nickel

Part Name	BNC-SMA-50JK	Third angle drawing			
Product Model					
DWG No.		Weight	Scale	Edition	Page no.
DRAWN	MARK			A/0	1/1