客户料号:2589186
产品图号:

版次	详细描述	变更日期	变更者
A/0			

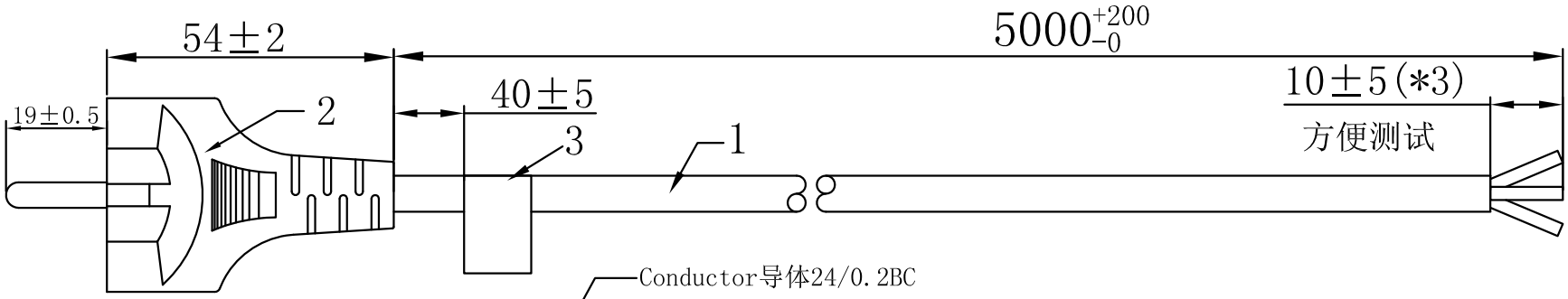

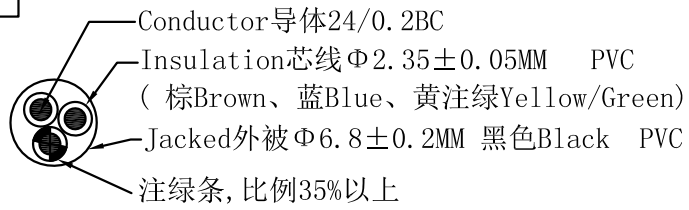

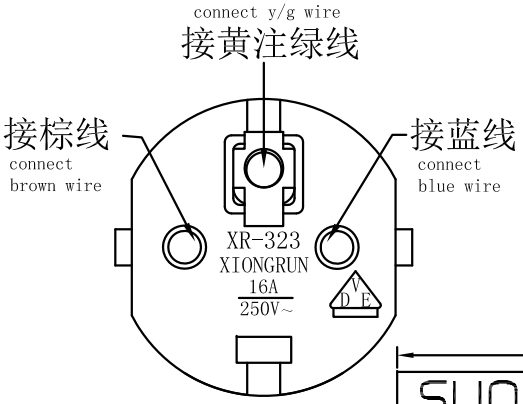

线材印字为凹印，字轮编号：BY101; wire marking:
◁VDE▷ KEMA-KEUR H05VV-F 3G0.75mm² Q080451
GUANGDONG XIONGRUN ELECTRICAL CO.,LTD.

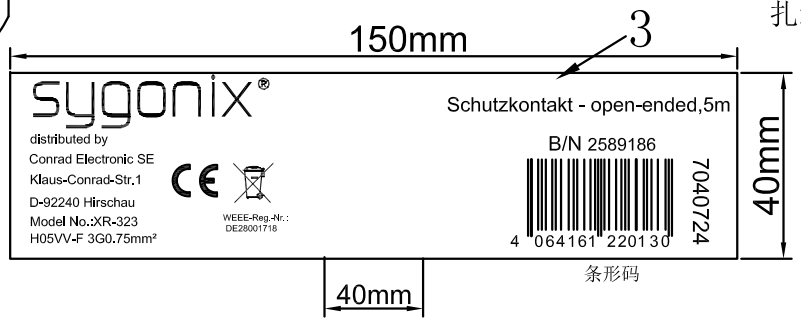

扎线方式

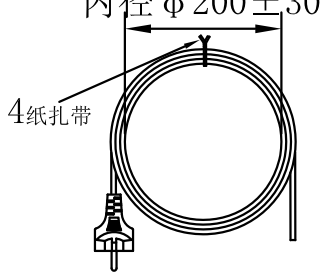

两条纸扎带重叠扎紧

技术要求:requirement:
1:耐压测试:外高压4200V/S;内高压2500V/S;
Dielectric voltage :between jacket and conductors 4200V/S between conductors 2500V/S
2:绝缘阻抗不小于100兆欧.
Insulation resistance 100MΩ.
3:100%导通OK.
Continuity of lead 100% OK.
4:符合ROHS.
RoHS COMPLIANT.

NO.	DESCRIPTION	QTY	unit
4	纸扎带	2	EA
3	XR-1638203 线上条形码标签 白底黑字	1	EA
2	法式插头（XR-323）16A 250V～ ,COLOR:黑色black,PVC	1	EA
1	H05VV-F 3G0.75mm² , COLOR:黑色Black	1	EA

DESCRIPTION		DRAW NO.	XR-1638203	UNIT	M M
PARTS NO		SCALE	NONE	DATE	23/05/2022
APPROVED		CHECKED		DRAWING	梁静雅