B3AL

Long-stroke Tactile Switch (SMT)

Long-stroke Tactile Switches with High Operating Forces and Long Life.

- **High operating force also providing long life. (Reference values: OF = 5 N {510 gf}, Durability = 500,000 operations)**
- **Long stroke achieved by using a rubber plunger.**

RoHS Compliant



Model Number Legend

B3AL-100□□- □
1 2 3

1.Operating Force (OF)

Symbol	Meaning
0	1.96 N {200 gf}
1	2.45 N {250 gf}
2	3.00 N {306 gf}
3	3.50 N {357 gf}
4	5.00 N {510 gf}
5	4.50 N {459 gf}
6	4.00 N {408 gf}

2.Packaging

Symbol	Meaning
P	Embossed tape

3.Special Specification

Symbol	Meaning
MS	Switch with middle stroke

List of Models / Operating Characteristics

Color of pushbutton			Red	Green	Black	White (Milky-white)	Brown
Operating force (OF)			1.96±0.59 N {200±60 gf}	2.45±0.69 N {250±70 gf}	3.00±0.90 N {306±92 gf}	3.50±1.05 N {357±107 gf}	4.00±1.20 N {408±122 gf}
Releasing force (RF)			0.24 N {24 gf} min.	0.49 N {50 gf} min.	0.60 N {61 gf} min.	0.70 N {71 gf} min.	0.70 N {71 gf} min.
Pretravel (PT)			1.3 $^{+0.2}_{-0.3}$ mm				
Packaging	**Embossed tape**	**Model**	**B3AL-1000P**	**B3AL-1001P**	**B3AL-1002P**	**B3AL-1003P**	**B3AL-1006P**
		Minimum packing unit	1,400 pcs				

Color of pushbutton			Pink	Blue	Gray	Yellow
Operating force (OF)			4.50±1.35 N {459±138 gf}	5.00±1.50 N {510±153 gf}	3.00±0.90 N {306±92 gf}	3.50±1.05 N {357±107 gf}
Releasing force (RF)			0.70 N {71 gf} min.	1.00 N {102 gf} min.	0.60 N {61 gf} min.	0.70 N {71 gf} min.
Pretravel (PT)			1.3 $^{+0.2}_{-0.3}$ mm		1.0±0.25mm	
Packaging	**Embossed tape**	**Model**	**B3AL-1005P**	**B3AL-1004P**	**B3AL-1002P-MS**	**B3AL-1003P-MS**
		Minimum packing unit	1,400 pcs			

Ratings / Characteristics

Rating (resistive load)	1 to 50 mA at 5 to 16 VDC
Ambient operating temperature	-40°C to +90°C at 60%RH max. (with no icing or condensation)
Ambient operating humidity	35% to 85% (at +5 to +35 °C)
Contact configuration	SPST-NO
Contact resistance	100 mΩ max.
Insulation resistance	100 MΩ min. (at 500 VDC with insulation tester)
Dielectric strength	250 VAC, 50/60 Hz for 1 min
Bounce time	5 ms max. (The center of the plunger is pressed at a speed of 3 or 4 times per second.)
Vibration resistance	Malfunction: 10 to 55 Hz, 1.5-mm double amplitude
Shock resistance	Destruction: 1,000 m/s² max. Malfunction: 100 m/s² max.
Durability	B3AL-1000P : 1,000,000 operations min. B3AL-1001P : 1,000,000 operations min. B3AL-1002P : 1,000,000 operations min. B3AL-1003P : 1,000,000 operations min. B3AL-1004P : 500,000 operations min. B3AL-1005P : 1,000,000 operations min. B3AL-1006P : 1,000,000 operations min. B3AL-1002P-MS : 1,000,000 operations min. B3AL-1003P-MS : 1,000,000 operations min.
Weight	Approx. 0.18 g

Model Structure

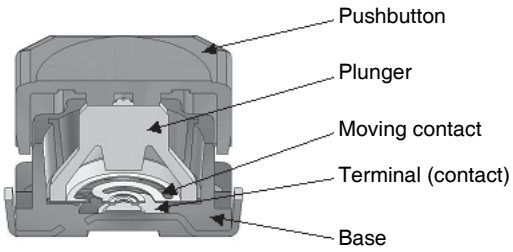

Dimensions (Unit: mm)



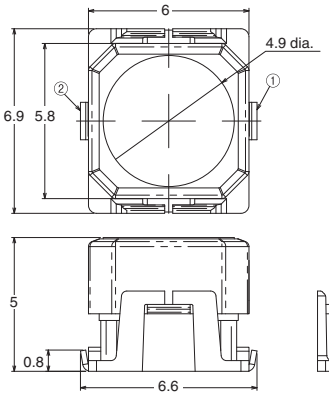

PCB Pad (Top View)

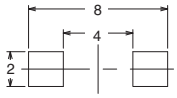

Terminal Arrangement/ Internal Connections (Top View)

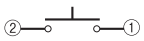

Note: Unless otherwise specified, a tolerance of ±0.4 mm applies to all dimensions. No terminal numbers are indicated on the Switches.

Precautions

Note: Be sure to read the precautions common to all Tactile Switches for correct use.

Precautions for Correct Use

soldering

Do not exceed the following terminal temperature profile during soldering in a reflow oven.

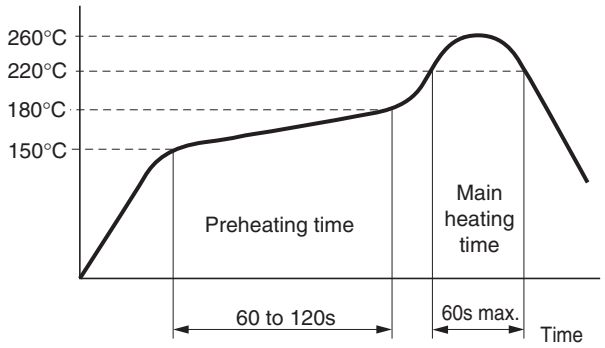

Washing

The Switches are not sealed, and cannot be washed.

Doing so will cause the washing agent, together with flux or dust particles on the PCB, to enter the Switch, resulting in malfunction.

Packaging Specifications

The packaging specifications for B3AL Switches in embossed taping are given below.

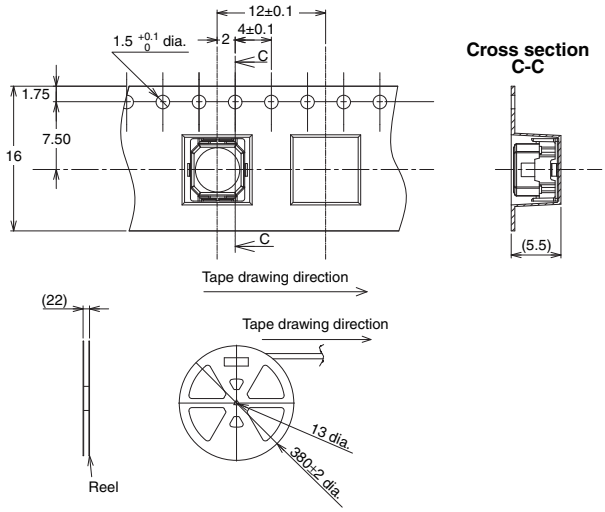

Operation

- Do not repeatedly operate the Switch with excessive force. Applying excessive pressure or applying additional force after the plunger has stopped may deform the disk spring of the Switch, resulting in malfunction.
- Be sure to set up the Switch so that the plunger will operate in a straight vertical line.
  If the plunger is pressed of-center or from an angle it may cause deformation or damage to some parts.
- We recommend using a round bar with a diameter of at least 3 mm as the actuator.

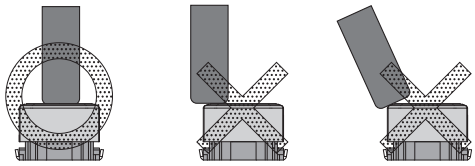

Dust Countermeasures

Do not mount or use the Switch in areas that are subject to dust.

If dust is unavoidable, protect the Switch with a sheet or other countermeasure.

Water and Drip Resistance

The switch is not water or drip resistant.

Do not use it in locations subject to water.

- Application examples provided in this document are for reference only. In actual applications, confirm equipment functions and safety before using the product.
- Consult your OMRON representative before using the product under conditions which are not described in the manual or applying the product to nuclear control systems, railroad systems, aviation systems, vehicles, combustion systems, medical equipment, amusement machines, safety equipment, and other systems or equipment that may have a serious influence on lives and property if used improperly. Make sure that the ratings and performance characteristics of the product provide a margin of safety for the system or equipment, and be sure to provide the system or equipment with double safety mechanisms.

Note: Do not use this document to operate the Unit.

OMRON Corporation
Electronic and Mechanical Components Company **Contact: www.omron.com/ecb**
Cat. No. A196-E1-06
0817(0207)(O)