DTS20W15-18SN [V001] ✔ ACTIVE

DEUTSCH

TE Internal #: YDTS20W15-18SNV001

Standard Circular Connectors, Wire-to-Wire, 18 Position, .1 in [.06 mm] Centerline, Sealable, Wire & Cable, Power & Signal, Panel Mount, Cadmium O.D.

View on TE.com >

Connectors > Circular Connectors > Standard Circular Connectors > D38999: Square Flange, 15-18 insert



Connector System: **Wire-to-Wire**

Number of Positions: **18**

Centerline (Pitch): **.06 mm [.1 in]**

Sealable: **Yes**

Connector & Contact Terminates To: **Wire & Cable**

All D38999: Square Flange, 15-18 insert (64)

Features

Product Type Features

Product Type	Connector
Connector System	Wire-to-Wire
Sealable	Yes
Connector & Contact Terminates To	Wire & Cable
Circular Connector Type	Receptacle
Shell Type	Square Flange Receptacle

Configuration Features

Number of Positions	18
Number of Power Positions	0
Number of Signal Positions	18
Contacts Preloaded	No

Body Features

Shell Plating Material	Cadmium O.D.
Shell Base Material	Aluminum
Circular Connector Insulation Material Type	Hard Dielectric/Silicone
Hermetically Sealed	No

Contact Features

Contact Current Rating (Max)	7.5 A
Reverse Gender	No
Contact Layout Arrangement	Circular
Circular Connector Contact Type	Pin/Socket

Mechanical Attachment

Connector Mounting Type	Panel Mount
Polarization Code	Normal
Mating Alignment Type	Polarization
Mating Retention	Without

Housing Features

Centerline (Pitch)	.06 mm[.1 in]
Circular Connector Shell Size	D (15)
Alignment Keyed	Clocking

Dimensions

Wire Size	.25 – 1.04 mm^2

Usage Conditions

Operating Temperature Range	-65 – 200 °C[-85 – 392 °F]

Operation/Application

Circuit Application	Power & Signal
Shielded	Yes

Product Compliance

For compliance documentation, visit the product page on TE.com>

EU RoHS Directive 2011/65/EU	Not Compliant
EU ELV Directive 2000/53/EC	Not Compliant
China RoHS 2 Directive MIIT Order No 32, 2016	Restricted Materials Above Threshold
EU REACH Regulation (EC) No. 1907/2006	Current ECHA Candidate List: JUNE 2022 (224) Candidate List Declared Against: JUNE 2022 (224) SVHC > Threshold: Pb (1.2% in Contact Lead-Copper Alloy) Decamethylcyclopentasiloxane (D5) (5% in Insert subassembly)

	Cd (3.41% in Plating) **Article Safe Usage Statements:** Use personal protective equipment as required. Do not eat, drink or smoke when using this product. Wash thoroughly after handling. Recycle if possible and dispose of the article by following all applicable governmental regulations relevant to your geographic location.
Halogen Content	Not Yet Reviewed for halogen content
Solder Process Capability	Not reviewed for solder process capability

Product Compliance Disclaimer

This information is provided based on reasonable inquiry of our suppliers and represents our current actual knowledge based on the information they provided. This information is subject to change. The part numbers that TE has identified as EU RoHS compliant have a maximum concentration of 0.1% by weight in homogenous materials for lead, hexavalent chromium, mercury, PBB, PBDE, DBP, BBP, DEHP, DIBP, and 0.01% for cadmium, or qualify for an exemption to these limits as defined in the Annexes of Directive 2011/65/EU (RoHS2). Finished electrical and electronic equipment products will be CE marked as required by Directive 2011/65/EU. Components may not be CE marked. Additionally, the part numbers that TE has identified as EU ELV compliant have a maximum concentration of 0.1% by weight in homogenous materials for lead, hexavalent chromium, and mercury, and 0.01% for cadmium, or qualify for an exemption to these limits as defined in the Annexes of Directive 2000/53/EC (ELV). Regarding the REACH Regulation, the information TE provides on SVHC in articles for this part number is based on the latest European Chemicals Agency (ECHA) 'Guidance on requirements for substances in articles' posted at this URL: https://echa.europa.eu/guidance-documents/guidance-on-reach

Compatible Parts



TE Part # CAT-D38999-DTS23T
D38999: Straight Plug, 15-18 Insert

Customers Also Bought



TE Part #YDTS26W15-05PNV001
D38999: Straight Plug, 15-05 Insert



TE Part #YDTS20W15-35SNV001
RECP ASSY



TE Part #YDTS26W09-35PNV001
PLUG ASSY



TE Part #YDTS20W17-06PNV001
D38999: Square Flange, 17-06 insert



TE Part #YDTS20W25-61SNV001
RECP ASSY



TE Part #YDTS26W17-08PAV001
PLUG ASSY



TE Part #YDTS26W25-61PNV001
PLUG ASSY

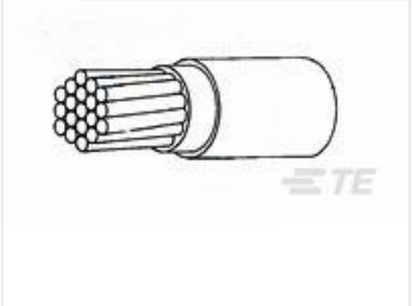

TE Part #265047-001
81044/9-4-9

Documents

Datasheets & Catalog Pages

DEUTSCH MIL-DTL-38999 CIRCULAR CONNECTORS

English