This document was generated on 02/03/2023

# PLEASE CHECK WWW.MOLEX.COM FOR LATEST PART INFORMATION

**Part Number:** 0986581212
**Status:** Active
**Overview:** MOX Products
**Description:** MOX Crimp Terminal, Female, 0.635mm, 18-22 AWG (0.75mm²), Reel, Tin (Sn)

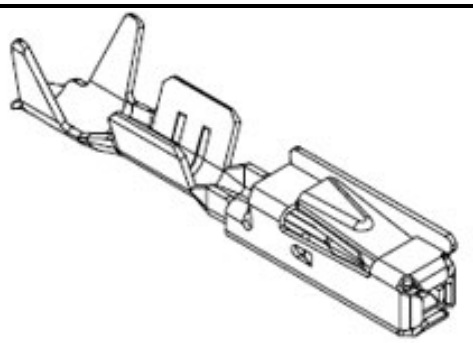

*Series image - Reference only*

**Documents:**

3D Model
3D Model (PDF)
Drawing (PDF)
Application Specification 989820002-AS-000 (PDF)
Application Specification 989820002-AS-CH-000 (PDF)
Application Specification AS-98658-001-001 (PDF)
Application Specification AS-98658-001-CH-001 (PDF)
Application Specification AS-98944-005-001 (PDF)
RoHS Certificate of Compliance (PDF)

**General**

| | |
|---|---|
| Product Family | Crimp Terminals |
| Series | 98658 |
| Application | Power, Wire-to-Board, Wire-to-Wire |
| Comments | Terminal has Stainless Steel Sleeve |
| Crimp Quality Equipment | Yes |
| Overview | MOX Products |
| Product Name | MOX |
| Taxonomy | Crimp Terminals |
| UPC | 800756560199 |

**Physical**

| | |
|---|---|
| Durability (mating cycles max) | 20 |
| Gender | Female |
| Material - Metal | Copper-Nickel-Silicon, Stainless Steel |
| Material - Plating Mating | Tin |
| Material - Plating Termination | Tin |
| Net Weight | 0.258/g |
| Packaging Type | Reel |
| Plating min - Mating | 1.016µm |
| Plating min - Termination | 1.016µm |
| Termination Interface: Style | Crimp or Compression |
| Wire Insulation Diameter | 1.70mm max. |
| Wire Size AWG | 18 |
| Wire Size mm² | 0.82 |

**Electrical**

| | |
|---|---|
| Current - Maximum per Contact | 7.5A |

**Solder Process Data**

| | |
|---|---|
| Lead-freeProcess Capability | N/A |

**Material Info**

**Reference - Drawing Numbers**

| | |
|---|---|
| Application Specification | 989820002-AS-000, 989820002-AS-CH-000, AS-98658-001-001, AS-98658-001-CH-001, AS-98944-005-001 |
| Crimp Specification | CS-98658-001-001 |
| Sales Drawing | SD-98658-004-001 |

**EU ELV**
**Compliant**

**EU RoHS** | **China RoHS**
**Compliant**

**REACH SVHC**
Not Contained Per - D(2022)4187-DC (10 June 2022)

**Halogen-Free Status**
**Low-Halogen**

For more information, please visit Contact US

| | |
|---|---|
| China ROHS | Green Image |
| ELV | Compliant |
| RoHS Phthalates | Not Contained |

**Search Parts in this Series**
98658 Series

**Use With**
all 0.635mm MOX Housings

**Application Tooling** | **FAQ**

*Tooling specifications and manuals are found by selecting the products below. Crimp Height Specifications are then contained in the Application Tooling Specification document.*

**Global**

| Description | Product # |
|---|---|
| Hand Crimp Tool | 638119300 |
| MOX Extraction Tool | 638132600 |
| Extractor Tool for 2.80mm Crimp Terminals | 638136900 |
| Extractor Tool for 2.80mm Crimp Terminals | 638137000 |
| Extractor Tool for MOX 0.635mm | 638138400 |

| | |
|---|---|
| Receptacle Crimp Terminals | |
| Extractor Tool for MOX 0.635mm Receptacle Crimp Terminals | 638138500 |
| Extractor Tool for MOX 0.635mm Receptacle Crimp Terminals | 638244400 |
| FineAdjust Applicator | 638667000 |

This document was generated on 02/03/2023

**PLEASE CHECK WWW.MOLEX.COM FOR LATEST PART INFORMATION**