This document was generated on 02/03/2023

PLEASE CHECK WWW.MOLEX.COM FOR LATEST PART INFORMATION

Part Number: 0986581211
Status: Active
Overview: MOX Products
Description: MOX Crimp Terminal, Female, 0.635mm, 20-24 AWG (0.22-0.60mm²), Reel, Tin (Sn)

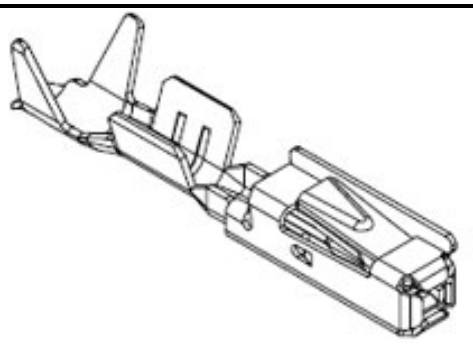

Series image - Reference only

Documents:

3D Model
Drawing (PDF)
3D Model (PDF)
Application Specification AS-500993-001-001 (PDF)
Application Specification AS-501352-001-001 (PDF)
Application Specification AS-98658-001-001 (PDF)
Application Specification AS-98658-001-CH-001 (PDF)
Application Specification AS-98944-005-001 (PDF)
RoHS Certificate of Compliance (PDF)

General

Product Family	Crimp Terminals
Series	98658
Application	Power, Wire-to-Board, Wire-to-Wire
Comments	Terminal has Stainless Steel Sleeve
Crimp Quality Equipment	Yes
Overview	MOX Products
Product Name	MOX
Taxonomy	Crimp Terminals
UPC	800753127418

Physical

Durability (mating cycles max)	20
Gender	Female
Material - Metal	High Performance Alloy (HPA), Stainless Steel
Material - Plating Mating	Tin
Material - Plating Termination	Tin
Net Weight	0.120/g
Packaging Type	Reel
Plating min - Mating	1.016µm
Plating min - Termination	1.016µm
Termination Interface: Style	Crimp or Compression
Wire Insulation Diameter	1.20-1.80mm
Wire Size AWG	20, 22
Wire Size mm²	0.22-0.60

Electrical

Current - Maximum per Contact	7.5A

Solder Process Data

Lead-freeProcess Capability	N/A

Material Info

Reference - Drawing Numbers

Application Specification	AS-500993-001-001, AS-501352-001-001, AS-98658-001-001, AS-98658-001-CH-001, AS-98944-005-001
Crimp Specification	CS-98658-001-001
Sales Drawing	SD-98658-004-001

EU ELV
Compliant

EU RoHS
Compliant

China RoHS

REACH SVHC
Not Contained Per - D(2022)4187-DC (10 June 2022)

Halogen-Free Status
Low-Halogen

For more information, please visit Contact US

China ROHS	Green Image
ELV	Compliant
RoHS Phthalates	Not Contained

Search Parts in this Series
98658 Series

Use With
all 0.635mm MOX Housings

Application Tooling | **FAQ**

Tooling specifications and manuals are found by selecting the products below. Crimp Height Specifications are then contained in the Application Tooling Specification document.

Global

Description	Product #
Hand Crimp Tool	638119300
MOX Extraction Tool	638132600
Extractor Tool for 2.80mm Crimp Terminals	638136900
Extractor Tool for 2.80mm Crimp Terminals	638137000
Extractor Tool for MOX 0.635mm	638138400

Receptacle Crimp Terminals	
Extractor Tool for MOX 0.635mm Receptacle Crimp Terminals	638138500
Extractor Tool for MOX 0.635mm Receptacle Crimp Terminals	638244400
FineAdjust Applicator	638666000

This document was generated on 02/03/2023

PLEASE CHECK WWW.MOLEX.COM FOR LATEST PART INFORMATION