Data Sheet

LED socket dia. 5 mm with chromium plating

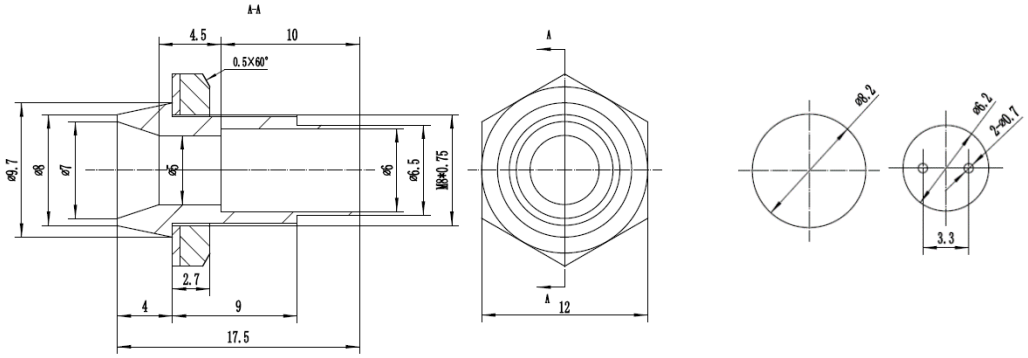

Technical data

For dia. 5 mm LED

Body materials: Chromium plated brass

Base materials: Nylon PA66

Nut: Metal

Mounting hole: Ø 8.2

M8*0.75P