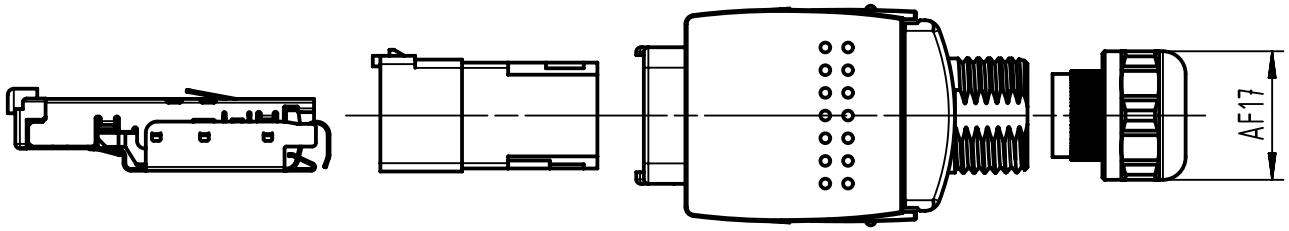

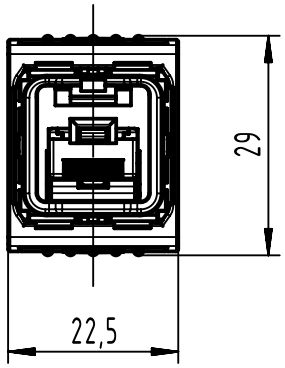

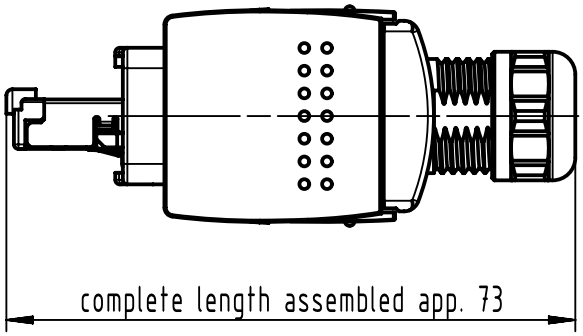

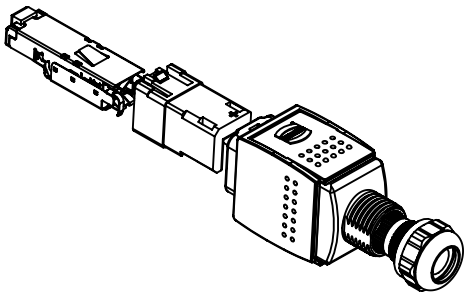

All Dimensions in mm Original Size DIN A4	Scale 1:1	Free size tol.		Ref. Sub.	
All rights reserved Department EL PD	Created by ZWAHR	Inspected by ELLERMANN	Standardisation 302077	Date 2020-10-27	State Final Release
	Title Han PP V14 RJ45 plug PN metal 5-8mm				Doc-Key / ECM-Nr. 100923768/UGD/003/A 500000182129
HARTING Electronics GmbH D-32339 Espelkamp	Type TB	Number 09352220401		Rev. A	Page 1/1

A4