Companion Wall 2.0

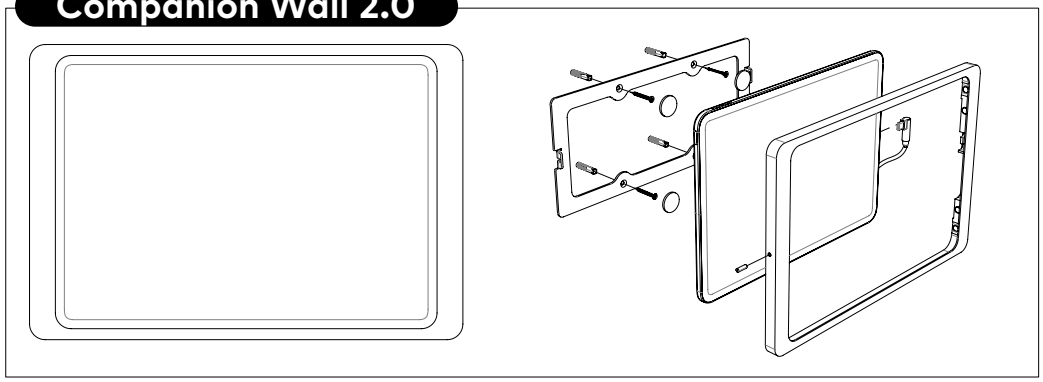

1

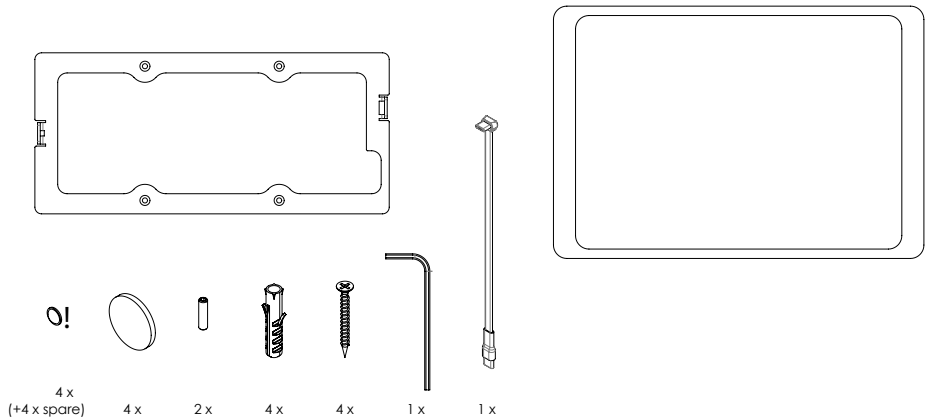

2

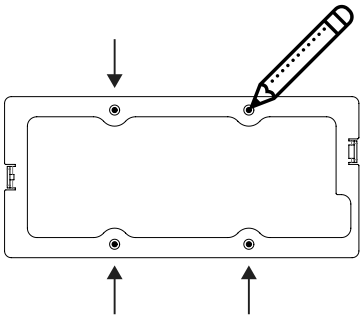

3

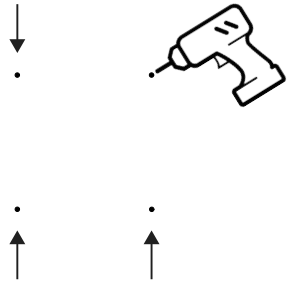

4

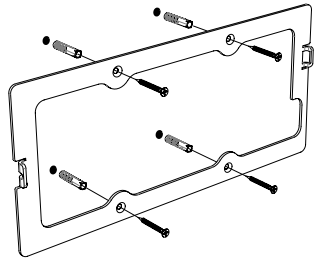

5

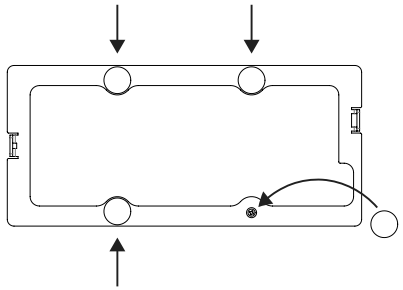

6

Only for iPad Air 10.9" (4th, 5th gen.)
and iPad Pro 11" (1st, 2nd, 3rd, 4th gen.)

place 4 silicone pads in marked positions 4 x !

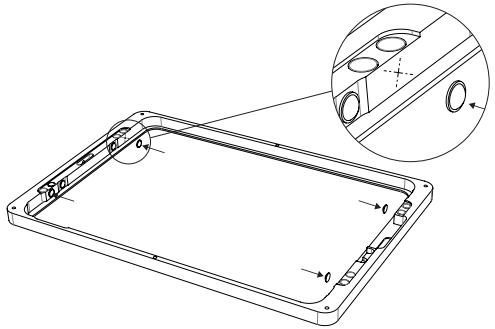

7

Start inserting the iPad from the side where the charging cabel is plugged in. Caution: risk of damaging usb cabel !

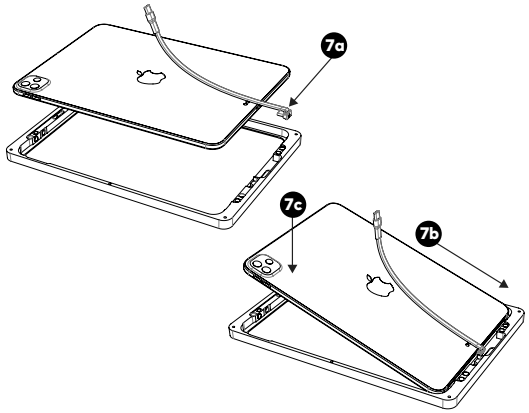

8

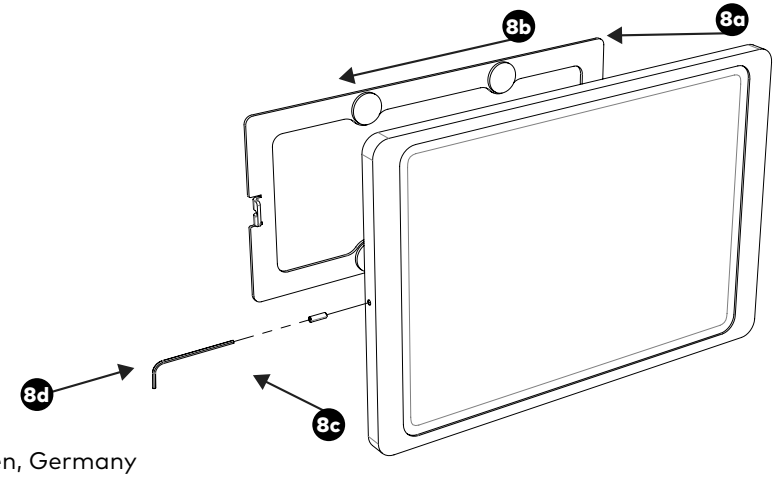

Displine GmbH, Mainzer Strasse 97, 65189 Wiesbaden, Germany
t: +49 611 236 856 90 e: info@displine.com w: displine.com