Data Sheet - TRU Components
BN: 3208260

Last updated: 15 Nov 2024
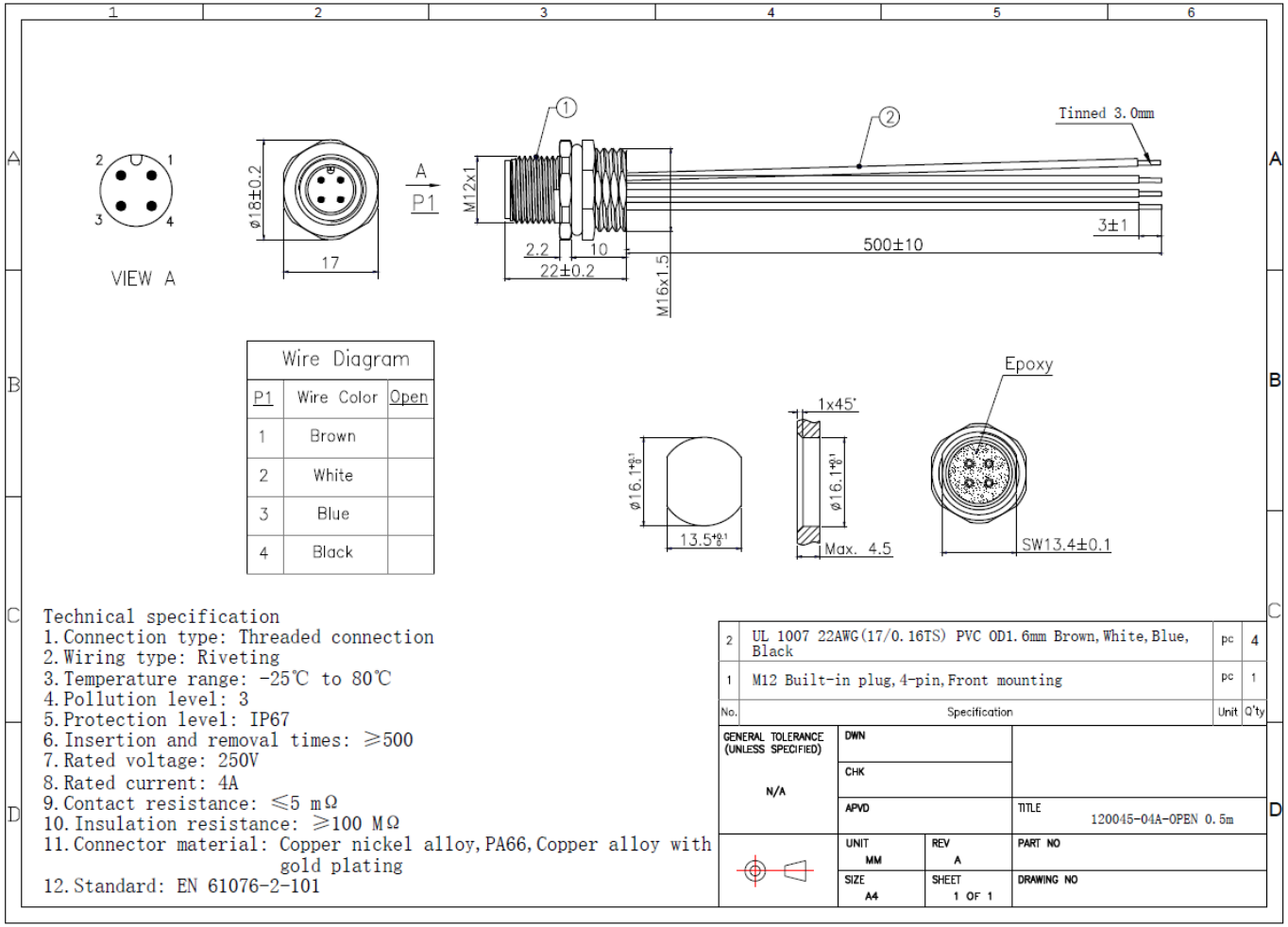
M12 250 V Built-in plug, 4-pole, Front mounting, stranded wire, 0.5 m