Data Sheet - TRU Components
BN: 3208261

Last updated: 15 Nov 2024

M12 60 V Built-in coupling, 5-pole, Front mounting, stranded wire, 0.5 m

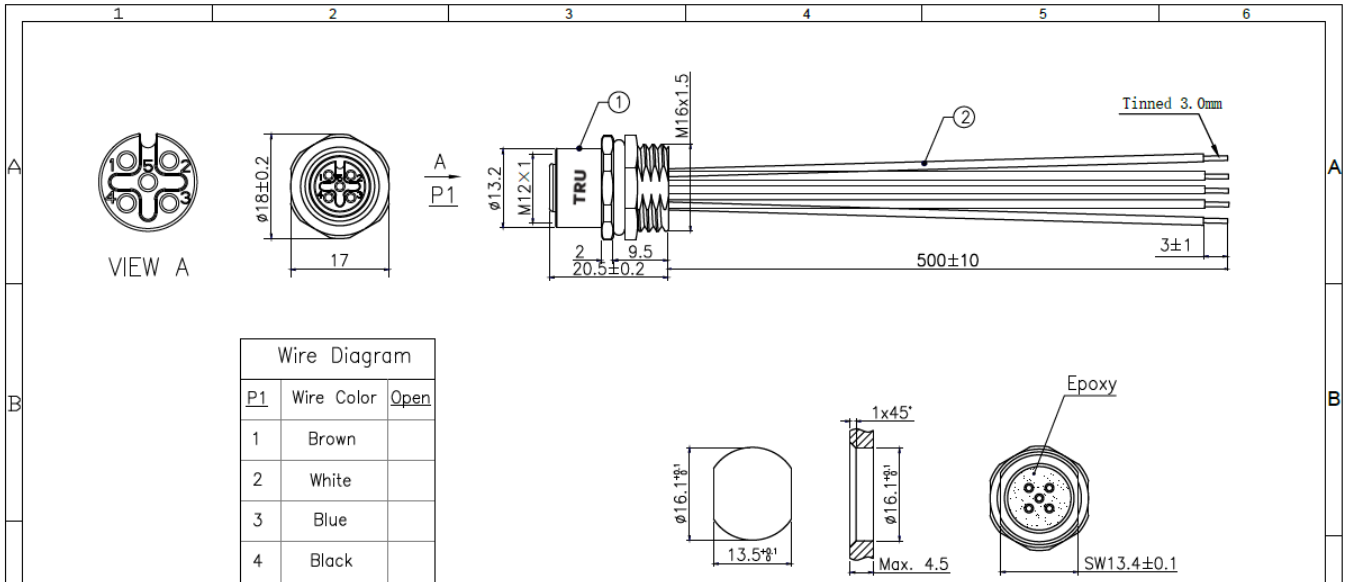

Wire Diagram		
P1	Wire Color	Open
1	Brown	
2	White	
3	Blue	
4	Black	
5	Grey	

Technical specification

1. Connection type: Threaded connection
2. Wiring type: Riveting
3. Temperature range: -25℃ to 80℃
4. Pollution level: 3
5. Protection level: IP67
6. Insertion and removal times: ≥500
7. Rated voltage: 60V
8. Rated current: 4A
9. Contact resistance: ≤5 mΩ
10. Insulation resistance: ≥100 MΩ
11. Connector material: Copper nickel alloy, PA66, Copper alloy with gold plating
12. Standard: EN 61076-2-101

No.	Specification	Unit	Q'ty
2	UL 1007 22AWG(17/0.16TS) PVC OD1.6mm Brown, White, Blue, Black, Grey	pc	5
1	M12 Built-in socket, 5-pin, Front mounting	pc	1

GENERAL TOLERANCE (UNLESS SPECIFIED) N/A	DWN		
	CHK		
	APVD		TITLE 120052-05A-OPEN 0.5m
	UNIT MM	REV A	PART NO
	SIZE A4	SHEET 1 OF 1	DRAWING NO