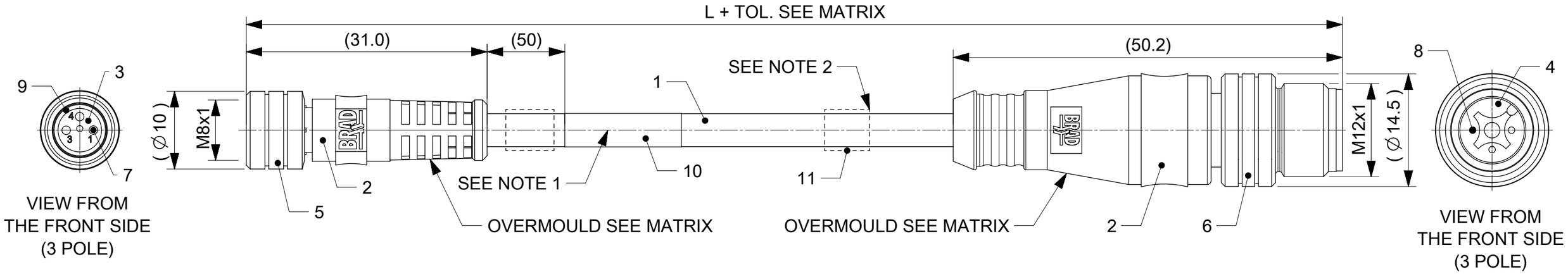

CONTACTS POSITION FRONT VIEW:

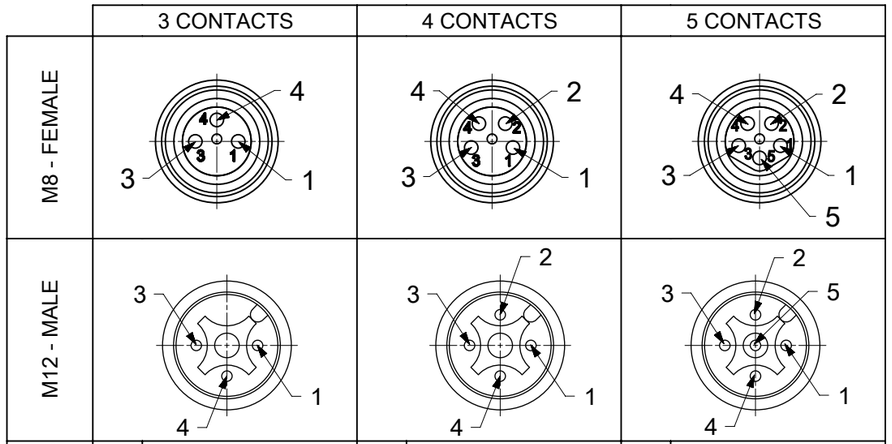

CONNECTIONS

3 CONTACTS PIN	3 CONTACTS WIRE	4 CONTACTS PIN	4 CONTACTS WIRE	5 CONTACTS PIN	5 CONTACTS WIRE
1	BROWN	1	BROWN	1	BROWN
3	BLUE	2	WHITE	2	WHITE
4	BLACK	3	BLUE	3	BLUE
		4	BLACK	4	BLACK
				5	GREY

CODING M8 ACCORDING TO IEC 61076-2-104
CODING M12 ACCORDING TO IEC IEC 61076-2-101

NOTES:

1. LABEL ON THE CABLE
   / FOR CABLE Ixx PRINTING ON THE CABLE
   (ENGINEERING No – THE SAME DIMENSION LIKE FOR LABEL)
2. 2 x ID CARRIER IF IN MATRIX IS "H"
   OR FOR CABLE IXX & P82.

ELECTRICAL DATA:
RATED VOLTAGE: 3 contacts 60V AC/DC
4 & 5 contacts 30V AC/DC
CURRENT RATING: 3, 4, 5 contacts 3A
PROTECTION CLASS: IP67
TEMPERATURE: SEE CABLE TYPE TABLE
PACKAGING ACCORDING TO PACKAGING SPEC. 1201202000

THIS DRAWING CONTAINS INFORMATION THAT IS PROPRIETARY TO MOLEX ELECTRONIC TECHNOLOGIES, LLC AND SHOULD NOT BE USED WITHOUT WRITTEN PERMISSION

FUNCTIONAL SYMBOLS: FA = 0, FC = 0, FP = 0
DIVISIONAL SYMBOLS

DIMENSION UNITS	SCALE
mm	2:1

GENERAL TOLERANCES (UNLESS SPECIFIED)

ANGULAR TOL	±	1.0 °
4 PLACES	±	
3 PLACES	±	
2 PLACES	±	0.05
1 PLACE	±	0.3
0 PLACES	±	0.5

DRAFT WHERE APPLICABLE MUST REMAIN WITHIN DIMENSIONS

CURRENT REV DESC: NEW LENGTH ADDED

EC NO: 811973
DRWN: RSCHIEBER 2025/02/06
CHK'D: RSILLER 2025/02/07
APPR: RSILLER 2025/02/07

INITIAL REVISION:
DRWN: AKONDRACIUK 2017/06/12
APPR: MIWASIECZKO 2017/06/14

molex

NC/MMC-XP-FE/MM-ST/ST-XM

PRODUCT CUSTOMER DRAWING

DOCUMENT NUMBER	DOC TYPE	DOC PART	REVISION
1200878038	PSD	000	A11

THIRD ANGLE PROJECTION	DRAWING	SERIES	MATERIAL NUMBER	CUSTOMER	SHEET NUMBER
	A3-SIZE	120087	SEE PART LIST	GENERAL MARKET	1 OF 3

DOCUMENT STATUS	P1	RELEASE DATE	2025/02/07 10:19:33

FORMAT: master_Sealed-A3
REVISION: J
DATE: 2020/01/14

PART NO MATRIX

4	8	*	0	3	0	*	*	*	M	*	*	*	*	*

OPTIONS (last two positions)

- 48 = M8x1/M12x1 DOUBLE ENDED
- POLES:
  3 = 3 POLES
  4 = 4 POLES
  5 = 5 POLES
- HEADER:
  030 = FEMALE STRAIGHT
  - MALE STRAIGHT
- CABLE TYPE SEE TABLE
- UNIT:
  M = METER
- LENGTH:
  EXAMPLE:
  010 = 1 m
  050 = 5 m
  100 = 10 m
- H = 2 PCS. OF I/D CARIERR
  MOLDING/OVERMOULD:
  BLANK = BLACK
  BLANK = YELLOW TPE-E for cables K05
  BLANK = YELLOW PUR for cables A09
  A = GREY
  G = BLACK
  Y = YELLOW
  COUPLING NUT:
  BLANK=KNU/HEX
  7=TEFLON
  BLANK=7 for cables K05

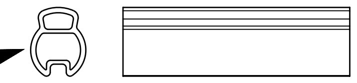

CABLE TYPE TABLE

CABLE TYPE	NO. OF WIRES	CROSS SECTION	CABLE JACKET	UL	CSA	STATIC: TEMP. / BENDING RADIUS	DYNAMIC: TEMP. / BENDING RADIUS	DRAG CHAIN	SHIELD
E02	3 4	0.25mm²	PVC BLACK	UL 2464/1729	C22.2 I/II A/B 80°C/300V	-30°C to +80°C, 10xO.D.	-10°C to +80°C, 15xO.D.	-	-
H08	3 4	0.25mm²	PUR BLACK LS0H	UL 21198/10493	C22.2 I/II A/B 80°C/300V	-40°C to +80°C, 5xO.D.	-25°C to +80°C, 10xO.D.	2 000 000 cycles at 20°C, Temp. range +5°C to +60°C	-
P02	3 4	0.25mm²	PUR / PVC BLACK	-	-	-30°C to +80°C, 7xO.D.	-5°C to +80°C, 15xO.D.	-	-
P82	3	0.34mm²	PUR IRR ORANGE	-	-	-50°C to +105°C, >5xO.D.	-40°C to +105°C, >7.5xO.D.	-	-
I02	3 4	0.25mm²	PVC CEI GREY	-	-	-30°C to +70°C	-5°C to +70°C	-	-
A09	4	0.34mm²	PVC YELLOW	UL 2661	I/II A/B 80°C/300V	-	-	-	-
K05	3 4	0.34mm²	TPE YELLOW	UL ITC or PLTC	I/II A/B 90°C/300V	max 105°C	-	-	-

TABLE OF LENGTH TOLERANCES		
OVER (mm)	UP TO AND INCLUDING (mm)	TOLERANCE (+) (mm)
0	305	+19
305	915	+45
915	1830	+56
1830	3660	+89
3660	7320	+165
7320	14640	+317
14640	30500	+610
30500	>	+2% OF LENGTH

BILL OF MATERIALS

ITEM	3P	4P	QTY.	DESCRIPTION	MATERIAL	FINISH
1	X	X	-	CABLE (SEE MATRIX)	-	-
2	X	X	-	MOULDING MATERIAL	SEE MATRIX	-
3	X	X	3/4	CONTACT 10 FE STA AU CR WRA 0.14-0.50	COPPER	Au
4	X	X	3/4	CONTACT 10 MA STA NI AU CR WRA 0.14-0.5	COPPER	Au
5	X		1,000	INSERT M8 FE 3P 0C CSE PUR BK UNSH	PUR	BK
6	X	X	1,000	GASKET OR FKM 5.0X0.8 RD 70	FKM	RD
7	X	X	1,000	NUT:M8:FEMALE-COUPLING	BRASS	
8	X		1,000	MMC-3P-MALE/MALE INSERT	PUR	BK
9	X	X	1,000	M12 MALE COUPLING NUT-BRASS;rev.1	BRASS	
10	X	X	1,000	HEAD BK M8 STR;12115-1;899921504	TPU	BK
11	X	X	1,000	HEAD BK M12 STR;12114-1;899921504	TPU	BK
12	X	X	1,000	LABEL;2.0X1.75;WRAP-B427;YE	PVC	YE
13	X	X	2,000	I/D CARRIER DIA 4-7MMX30MM	PVC	
14		X	1,000	INSERT M8 FE 4P 0C CSE PUR BK UNSH	PUR	BK
15		X	1,000	MMC-4P-MALE/MALE HOUSING	PUR	BK

DOCUMENT STATUS	P1	RELEASE DATE	2025/02/07 10:19:33

THIS DRAWING CONTAINS INFORMATION THAT IS PROPRIETARY TO MOLEX ELECTRONIC TECHNOLOGIES, LLC AND SHOULD NOT BE USED WITHOUT WRITTEN PERMISSION

FUNCTIONAL SYMBOLS: FA = 0, FC = 0, FP = 0
DIVISIONAL SYMBOLS

DIMENSION UNITS: mm | SCALE: 1:1

GENERAL TOLERANCES (UNLESS SPECIFIED)

ANGULAR TOL	± 1.0 °
4 PLACES	±
3 PLACES	±
2 PLACES	± 0.05
1 PLACE	± 0.3
0 PLACES	± 0.5

DRAFT WHERE APPLICABLE MUST REMAIN WITHIN DIMENSIONS

CURRENT REV DESC: NEW LENGTH ADDED

EC NO: 811973
DRWN: RSCHIEBER 2025/02/06
CHK'D: RSILLER 2025/02/07
APPR: RSILLER 2025/02/07

INITIAL REVISION:
DRWN: AKONDRACIUK 2017/06/12
APPR: MIWASIECZKO 2017/06/14

molex

NC/MMC-XP-FE/MM-ST/ST-XM

PRODUCT CUSTOMER DRAWING

DOCUMENT NUMBER	DOC TYPE	DOC PART	REVISION
1200878038	PSD	000	A11

THIRD ANGLE PROJECTION	DRAWING	SERIES	MATERIAL NUMBER	CUSTOMER	SHEET NUMBER
	A3-SIZE	120087	SEE PART LIST	GENERAL MARKET	2 OF 3

PART LIST

Part No	Engineering No	Cable Length
3P CABLE A09		
1200668248	483030A09M006	0.6m
3P CABLE E02		
1200878404	483030E02M003	0.3m
1200878405	483030E02M005	0.5m
1200878038	483030E02M006	0.6m
1200878406	483030E02M010	1m
1200878955	483030E02M015	1.5m
1200878039	483030E02M020	2m
1200878408	483030E02M030	3m
1200878409	483030E02M050	5m
1200878410	483030E02M100	10m
1200878646	483030E02M003H	0.3m
1200878597	483030E02M005H	0.5m
1200878647	483030E02M006H	0.6m
1200878407	483030E02M010H	1m
1200878648	483030E02M020H	2m
1200878649	483030E02M030H	3m
1200878656	483030E02M040H	4m
1200878650	483030E02M050H	5m
4P CABLE E02		
1200878459	484030E02M003	0.3m
1200878460	484030E02M005	0.5m
1200878461	484030E02M006	0.6m
1200878073	484030E02M010	1m
1200878462	484030E02M015	1.5m
1200879032	484030E02M016	1.6m
1200878961	484030E02M018	1.8m
1200878463	484030E02M020	2m
1200878962	484030E02M024	2.4m
1200878464	484030E02M025	2.5m
1200879033	484030E02M027	2.7m
1200878074	484030E02M030	3m
1200878963	484030E02M031	3.1m
1200878466	484030E02M035	3.5m
1200879034	484030E02M038	3.8m
1200878467	484030E02M040	4m
1200878964	484030E02M042	4.2m
1200878468	484030E02M050	5m
1200878469	484030E02M100	10m
1200878696	484030E02M005H	0.5m
1200878662	484030E02M010H	1m
1200878668	484030E02M020H	2m
1200878669	484030E02M025H	2.5m
1200878465	484030E02M030H	3m
1200878670	484030E02M050H	5m

Part No	Engineering No	Cable Length
3P CABLE H08		
1200868220	483030H08M003	0.3m
1200868221	483030H08M006	0.6m
1200878510	483030H08M010	1m
1200878255	483030H08M020	2m
1200878524	483030H08M030	3m
1200878511	483030H08M050	5m
1200878512	483030H08M100	10m
1200868619	483030H08M003H	0.3m
1200868935	483030H08M006H	0.6m
1200879064	483030H08M010H	1.0m
1200878544	483030H08M010Y	1m
1200878992	483030H08M015H	1.5m
1200879002	483030H08M020H	2.0m
1200878993	483030H08M025H	2.5m
1200879065	483030H08M035H	3.5m
1200868817	483030H08M040H	4m
1200879066	483030H08M045H	4.5m
1200879067	483030H08M050H	5.0m
1200879068	483030H08M055H	5.5m
1200879069	483030H08M060H	6.0m
1200879070	483030H08M065H	6.5m
1200879071	483030H08M070H	7.0m
1200879072	483030H08M075H	7.5m
1200879073	483030H08M080H	8.0m
4P CABLE H08		
1200878147	484030H08M003	0.3m
1200878565	484030H08M006	0.6m
1200878516	484030H08M010	1m
1200878566	484030H08M020	2m
1200878578	484030H08M0209	2m
1200878525	484030H08M030	3m
1200878567	484030H08M050	5m
1200878600	484030H08M0509	5m
1200878598	484030H08M100	10m
1200879000	484030H08M003H	0.3m
1200879008	484030H08M006H	0.6m
1200879005	484030H08M010H	1.0m
1200878994	484030H08M015H	1.5m
1200879009	484030H08M020H	2.0m
1200878995	484030H08M025H	2.5m
1200879006	484030H08M030H	3.0m
1200878996	484030H08M035H	3.5m
1200879099	484030H08M055H	5.5m
1200879075	484030H08M060H	6.0m
1200879076	484030H08M065H	6.5m

Part No	Engineering No	Cable Length
1200879077	484030H08M070H	7.0m
1200879078	484030H08M075H	7.5m
1200879079	484030H08M080H	8.0m
3P CABLE I02		
1200878411	483030I02M003	0.3m
1200280282	483030I02M006	0.6m
1200280056	483030I02M010	1m
1200878412	483030I02M015	1.5m
1200280057	483030I02M020	2m
1200280058	483030I02M030	3m
1200280059	483030I02M050	5m
1200878549	483030I02M010Y	1m
1200878531	483030I02M020Y	2m
1200878829	483030I02M030Y	3m
1200878532	483030I02M050Y	5m
1200878830	483030I02M100Y	10m
4P CABLE I02		
1200878519	484030I02M006	0.6m
1200878520	484030I02M010	1m
1200878470	484030I02M030	3m
1200878523	484030I02M050	5m
3P CABLE K05		
1200281261	483030K05M003	0.3m
1200870491	483030K05M006	0.6m
1200870493	483030K05M020	2.0m
1200870496	483030K05M050	5.0m
1200871081	483030K05M250	25m
4P CABLE K05		
1200878550	484030K05M003	0.3m
1200868555	484030K05M006	0.6m
1200281315	484030K05M010	1.0m
1200868556	484030K05M020	2.0m
1200868557	484030K05M050	5.0m
1200860669	484030K05M250	25m

Part No	Engineering No	Cable Length
3P CABLE P82		
1200878121	483030P82M003	0.3m
1200280411	483030P82M0037	0.3m
1200878045	483030P82M0067	0.6m
1200280869	483030P82M0107	1m
1200280532	483030P82M030	3m
3P CABLE P02		
1200668183	483030P02M003	0.3m
1200878413	483030P02M006	0.6m
1200878414	483030P02M010	1m
1200878848	483030P02M015	1.5m
1200878415	483030P02M020	2m
1200878416	483030P02M030	3m
1200878417	483030P02M050	5m
1200878418	483030P02M065	6.5m
1200878419	483030P02M070	7m
1200878420	483030P02M100	10m
4P CABLE P02		
1200878471	484030P02M006	0.6m
1200878472	484030P02M010	1m
1200878849	484030P02M015	1.5m
1200878473	484030P02M020	2m
1200878474	484030P02M030	3m
1200878475	484030P02M050	5m
1200878476	484030P02M100	10m

THIS DRAWING CONTAINS INFORMATION THAT IS PROPRIETARY TO MOLEX ELECTRONIC TECHNOLOGIES, LLC AND SHOULD NOT BE USED WITHOUT WRITTEN PERMISSION

FUNCTIONAL SYMBOLS = 0, = 0, = 0
DIVISIONAL SYMBOLS

DIMENSION UNITS: mm | SCALE: 1:1

GENERAL TOLERANCES (UNLESS SPECIFIED)
ANGULAR TOL ± 1.0 °
4 PLACES ±
3 PLACES ±
2 PLACES ± 0.05
1 PLACE ± 0.3
0 PLACES ± 0.5
DRAFT WHERE APPLICABLE MUST REMAIN WITHIN DIMENSIONS

CURRENT REV DESC: NEW LENGTH ADDED
EC NO: 811973
DRWN: RSCHIEBER 2025/02/06
CHK'D: RSILLER 2025/02/07
APPR: RSILLER 2025/02/07
INITIAL REVISION:
DRWN: AKONDRACIUK 2017/06/12
APPR: MIWASIECZKO 2017/06/14

molex

NC/MMC-XP-FE/MM-ST/ST-XM

PRODUCT CUSTOMER DRAWING

DOCUMENT NUMBER: 1200878038 | DOC TYPE: PSD | DOC PART: 000 | REVISION: A11

THIRD ANGLE PROJECTION | DRAWING: A3-SIZE | SERIES: 120087 | MATERIAL NUMBER: SEE PART LIST | CUSTOMER: GENERAL MARKET | SHEET NUMBER: 3 OF 3

DOCUMENT STATUS | P1 | RELEASE DATE | 2025/02/07 10:19:33

FORMAT: master-tb-prod-A3
REVISION: J
DATE: 2020/01/14

CABLE	P/N
484030H08M0209	1200878578

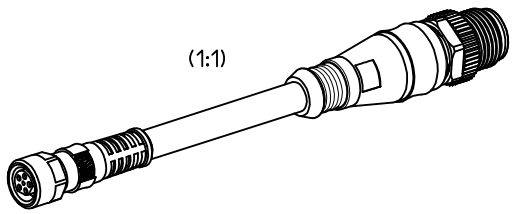

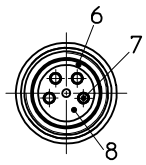

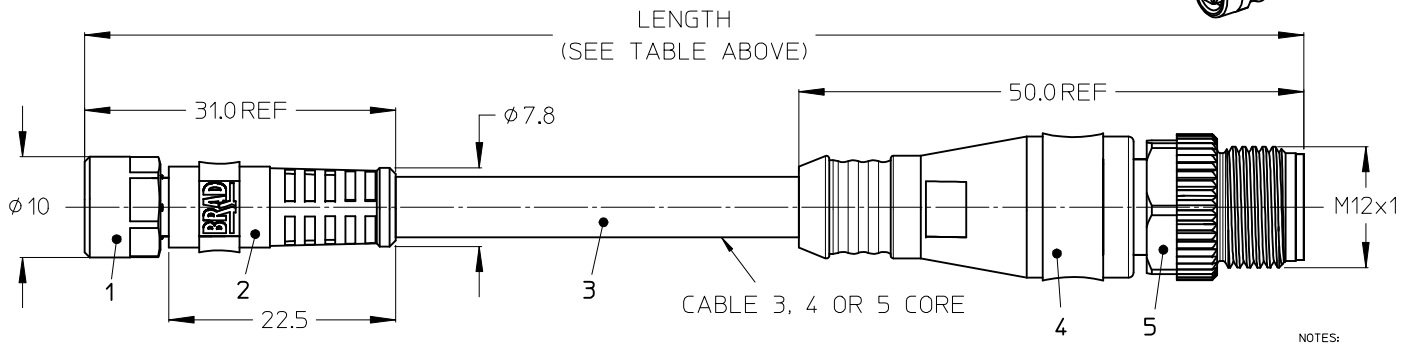

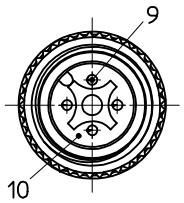

NOTES:

TEMPERATURE RANGE:	-25°C/+80°C
CONTACT CURRENT RATING:	3A
VOLTAGE RATING:	3 POLE (A-CODE) 60V 4 POLE (A-CODE) 30V 5 POLE (B-CODE) 30V
PROTECTION CLASS:	IP 67

NOTES:

TEMPERATURE RANGE:	-25°C/+80°C
CONTACT CURRENT RATING:	3-5 POLE 4A
VOLTAGE RATING:	3-4 POLE 250V 5 POLE 60V
PROTECTION CLASS:	IP 67

FACE VIEW

4 WIRE

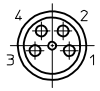

PIN NO.	WIRE
1	BROWN
2	WHITE
3	BLUE
4	BLACK
5	-

TOLERANCES

≤ 1m	+20/-10mm
1m - 5m	± 25mm
5m - 10m	± 30mm
> 10m	± 30mm
> 20m	± 50mm

FACE VIEW

4 WIRE

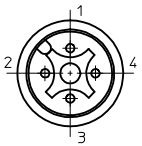

PIN NO.	WIRE
1	BROWN
2	WHITE
3	BLUE
4	BLACK
5	-

ITEM	COMPONENT	MATERIAL	FINISH
1	COUPLING NUT M8 FE	CuZn39Pb3 F44	Ni
2	OVERMOULD M8	TPU UF NATURAL C98A10	-
3	CABLE	SEE TABLE	-
4	OVERMOULD M12	TPU UF NATURAL C98A10	-
5	COUPLING NUT M12 MA	BRASS	Ni
6	GASKET	FKM	-
7	PIN CONTACT M8 FE	COPPER ALLOY	GOLD PLATED
8	INSERT M8 FE 4P	PUR	-
9	PIN CONTACT M12 MA	CuZn36	2µ Ni, 0.70µ GOLD
10	INSERT M12 MA 4P	PUR	-

ENTER DESCRIPTION
EC NO: IPG2013-0775
DRWN:RSCHIEBER 2012/11/28
CH'KD:RSILLER 2012/11/28
APPR:CBURGER 2012/12/05
DESCRIPTION
1
REV

QUALITY SYMBOLS
▼=0
Ⓒ=0

GENERAL TOLERANCES (UNLESS SPECIFIED)

	mm	INCH
4 PLACES	± ---	± ---
3 PLACES	± ---	± ---
2 PLACES	± 0.05	± ---
1 PLACE	± 0.30	± ---
0 PLACE	± 0.50	± ---

ANGULAR ± 1 °

DRAFT WHERE APPLICABLE MUST REMAIN WITHIN DIMENSIONS

DIMENSION STYLE: MM ONLY
SCALE: 2:1
DESIGN UNITS: METRIC
THIRD ANGLE PROJECTION

DRAWN BY	RSCHIEBER	DATE 2012/11/28
CHECKED BY	RSILLER	DATE 2012/11/28
APPROVED BY	CBURGER	DATE 2012/12/05

TITLE: CSE M8 M12 4P FE STR PUR MA STR 2M UNSH AU

molex

MATERIAL NO.: SEE TABLE
DOCUMENT NO.: SD-120087-046
SHEET NO.: 1 OF 2
SIZE: A3

THIS DRAWING CONTAINS INFORMATION THAT IS PROPRIETARY TO MOLEX INCORPORATED AND SHOULD NOT BE USED WITHOUT WRITTEN PERMISSION

NUMERICAL CODE

4	8	X	0	3	0	X	X	X	X	X	X	X	X	X

- 4 = M8x1
- 8 = M12x1
- poles:
  - 3 = 3 poles
  - 4 = 4 poles
  - 5 = 5 poles
- header:
  - 030 = female straight to male straight
- See table of cable types
- M = metres
  F = feet
- Length:
  Example
  020 = 2 m
  050 = 5 m
  200 = 20 m
- Coupling Nut Material
  Blank = Standard
  1 = Stainless steel
  5 = Delrin
  7 = TEFLON Coated
  9 = Knurled hex nut
- Blank = Yellow (Standard)
  A = Grey
  G = Black

CABLE:

E02 = 0.25mm², PVC BLACK
E51 = 0.25mm², PVC GREY
E54 = 0.25mm², PVC GREY HIFLEX
H08 = 0.25mm², PUR BLACK
I02 = 0.25mm², PVC GREY IRRADIATED
P02 = 0.25mm², PUR/PVC BLACK

ENTER DESCRIPTION	EC NO: IPG2013-0775	DRWN:RSCHIEBER 2012/11/28	CH'KD:RSILLER 2012/11/28	APPR:CBURGER 2012/12/05
REV 1	DESCRIPTION			

QUALITY SYMBOLS
▼=0
(C)=0

GENERAL TOLERANCES (UNLESS SPECIFIED)

	mm	INCH
4 PLACES	± ---	± ---
3 PLACES	± ---	± ---
2 PLACES	± 0.05	± ---
1 PLACE	± 0.30	± ---
0 PLACE	± 0.50	± ---

ANGULAR ± 1 °

DRAFT WHERE APPLICABLE MUST REMAIN WITHIN DIMENSIONS

DIMENSION STYLE: MM ONLY
SCALE: 2:1
DESIGN UNITS: METRIC
THIRD ANGLE PROJECTION

DRAWN BY: RSCHIEBER DATE: 2012/11/28
CHECKED BY: RSILLER DATE: 2012/11/28
APPROVED BY: CBURGER DATE: 2012/12/05

TITLE: CSE M8 M12 4P FE STR PUR MA STR 2M UNSH AU

molex

MATERIAL NO.: SEE SHT 1
DOCUMENT NO.: SD-120087-046
SHEET NO.: 2 OF 2
SIZE: A3

THIS DRAWING CONTAINS INFORMATION THAT IS PROPRIETARY TO MOLEX INCORPORATED AND SHOULD NOT BE USED WITHOUT WRITTEN PERMISSION