P/N OF ADAPTER	MATERIAL OF SPLIT SLEEVE	COLOR OF ADAPTER SHELL
106170-0100	CERAMIC	BLACK
106171-0100	PHOSPHOR BRONZE	
106170-0120	CERAMIC	GREEN
106171-0120	PHOSPHOR BRONZE	
106171-1120*		
106170-0130	CERAMIC	RED
106171-0130	PHOSPHOR BRONZE	
106170-0150	CERAMIC	BLUE
106170-0153*		
106171-0150	PHOSPHOR BRONZE	

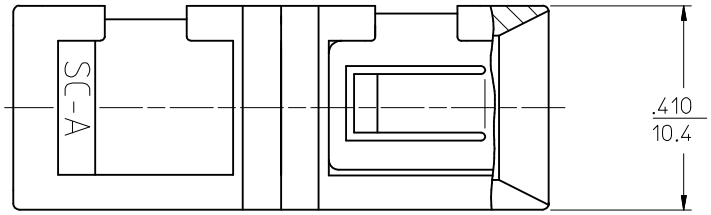

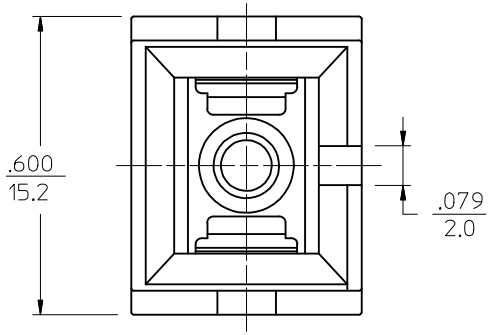

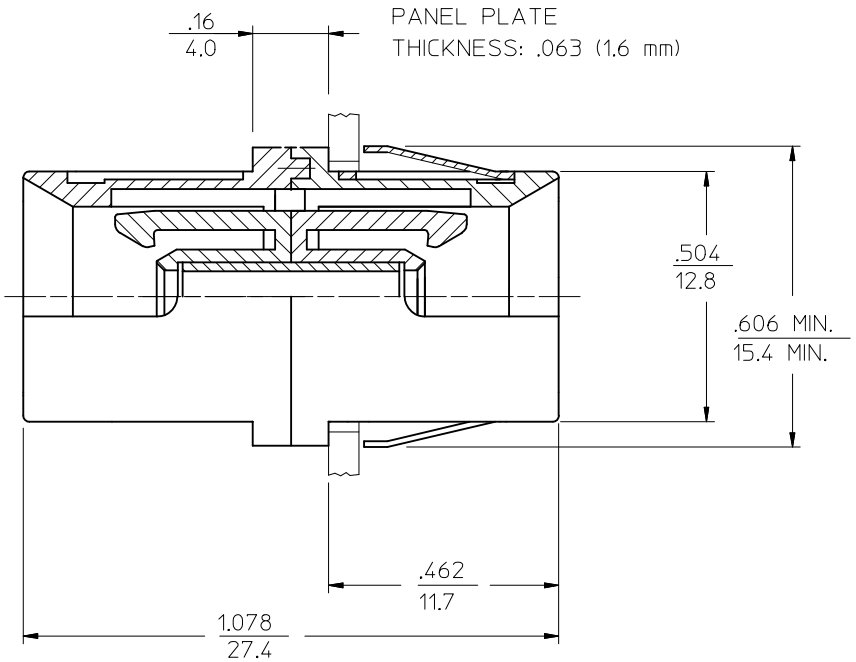

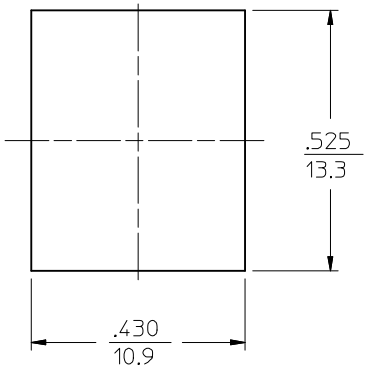

NOTES:

1. DUST CAPS ARE NOT SHOWN BUT INCLUDED.

*2. P/Ns 106171-1120 AND 106170-0153 ARE BULK PACKED ADAPTER KITS OF 100 PCS.

3. PLASTICS USED IN ADAPTERS ARE UL-94 V-0 RATED.

ENTER DESCRIPTION
EC NO: MF2013-0749
DRWN: IGUMIN 2013/06/04
CHKD:
APPR: IGUMIN 2013/06/12
DESCRIPTION
B
REV

QUALITY SYMBOLS
▼=0
Ⓒ=0

GENERAL TOLERANCES (UNLESS SPECIFIED)

	mm	INCH
4 PLACES	± ---	± ---
3 PLACES	± ---	± ---
2 PLACES	± ---	± ---
1 PLACE	± ---	± ---
ANGULAR ±1/2°		

DRAFT WHERE APPLICABLE MUST REMAIN WITHIN DIMENSIONS

DIMENSION STYLE: IN/MM
SCALE: 4:1
DESIGN UNITS: INCH
THIRD ANGLE PROJECTION

DRAWN BY: RPACIFICI DATE: 2005/10/11
CHECKED BY: DATE:
APPROVED BY: WCHEN DATE: 2010/07/01

TITLE: SC SMALL FLANGE ADAPTER

molex MOLEX INCORPORATED

MATERIAL NO.: SEE TABLE
DOCUMENT NO.: SD-10617X-01X0
SHEET NO.: 1 OF 01
SIZE: B

THIS DRAWING CONTAINS INFORMATION THAT IS PROPRIETARY TO MOLEX INCORPORATED AND SHOULD NOT BE USED WITHOUT WRITTEN PERMISSION