Part Number: 5027906091
Status: Active
Overview: FFC-FPC (SMT)
Description: 0.50mm Pitch Easy-On Front Flip FPC Connector, Surface Mount, ZIF, Double Bottom Contact, 2.50mm Height, Accepts FFC/FPC with Ear-tabs, 60 Circuits

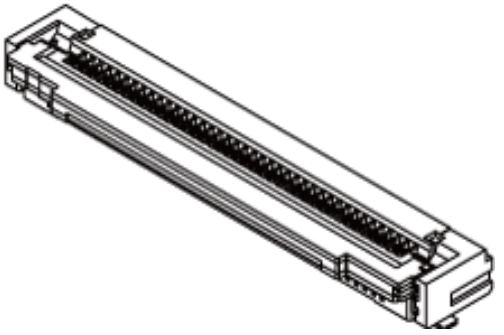
Series image - Reference only

Documents:
3D Model
Drawing (PDF)
Product Specification PS-502790-001-001 (PDF)
Product Specification PS-502790-002-001 (PDF)
Packaging Specification SPK-502790-001-001 (PDF)
RoHS Certificate of Compliance (PDF)

General

Product Family	FFC/FPC Connectors
Series	502790
Overview	FFC-FPC (SMT)
Product Name	Easy-On
UPC	883906339678

Physical

Actuator Type	Flip
Circuits (Loaded)	60
Color - Resin	Beige
Contact Position	Bottom
Mated Height	2.50mm
Material - Metal	Phosphor Bronze
Material - Plating Mating	Gold
Material - Plating Termination	Gold
Net Weight	548.381/mg
Number of Rows	1
Orientation	Right Angle
PCB Mounting	Surface Mount
PCB Retention	Yes
Packaging Type	Embossed Tape on Reel
Pitch - Mating Interface	0.50mm
Polarized to PCB	Yes
Stackable	No
Temperature Range - Operating	-40° to +105°C
Wire/Cable Type	FPC only

Electrical

Current - Maximum per Contact	0.5A
Voltage - Maximum	50V AC (RMS)/DC

Material Info

Reference - Drawing Numbers

Packaging Specification	SPK-502790-001-001
Product Specification	PS-502790-001-001, PS-502790-002-001
Sales Drawing	SD-502790-001, SD-502790-002

EU ELV
Not Relevant

EU RoHS
Compliant

China RoHS

REACH SVHC
Not Contained Per - ED/61/2018 (27 June 2018)

Halogen-Free Status
Not Low-Halogen

For more information, please visit Contact US

China ROHS	Green Image
ELV	Not Relevant
RoHS Phthalates	Not Contained

Search Parts in this Series
502790 Series