52003398	DATA SHEET	LAPP
Valid from: 04.10.2023	SKINDICHT® BL PG +FKM O-RING	

SKINDICHT® BL PG blind plugs are used wherever already existing housing holes are not yet required or no longer required.
Our blind plug model is equipped with a screwing slit, which makes installation significantly easier. The SKINDICHT® BL PG is qualified for use by machine, apparatus and electric motor construction.

Components:

Blind plug	Brass, nickel-plated
O-ring	FKM

Technical features:

Connecting thread	PG7 up to PG48 acc. to DIN 40430
Protection class	IP66, IP68 (10bar/30min) acc. to EN 60529
Temperature range	-20 °C up to +200 °C

Norm references:

CE

PG	Ø A [mm]	C [mm]	D [mm]	Article No.
PG 7	14	8	5	52003398
PG 9	17	9	6	52003399
PG 11	20	9	6	52003401
PG 13,5	22	9,5	6,5	52003402
PG 16	24	9,5	6,5	52003403
PG 21	30	11	7	52003404
PG 29	39	12	8	52003405
PG 36	50	15	9	52003406
PG 42	57	16	10	52003407
PG 48	64	16	10	52003408

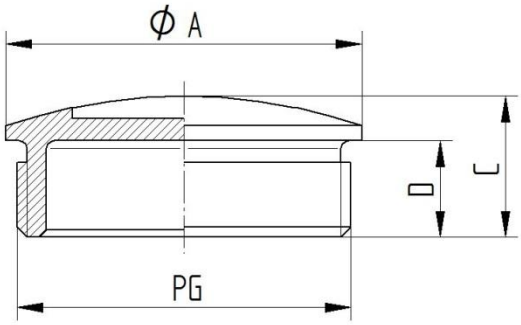

For more information, please see our current catalogue. Please do not hesitate to contact our laboratory if there are any questions regarding resistance against aggressive agents and special oil.

We reserve all rights according to DIN ISO 16016.
PD 0019/05_04.18EN