1KVA to 3KVA Rack-Tower conversion User’s Guide

Class B EMC Statements

(High Voltage Models up to 3000 VA)

FCC Part 15

NOTE This equipment has been tested and found to comply with the limits for a Class B digital device, pursuant to part 15 of the FCC Rules. These limits are designed to provide reasonable protection against harmful interference in a residential installation. This equipment generates, uses and can radiate radio frequency energy and, if not installed and used in accordance with the instructions, may cause harmful interference to radio communications. However, there is no guarantee that interference will not occur in a particular installation. If this equipment does cause harmful interference to radio or television reception, which can be determined by turning the equipment off and on, the user is encouraged to try to correct the interference by one or more of the following measures:

● Reorient or relocate the receiving antenna.

● Increase the separation between the equipment and the receiver.

● Connect the equipment into an outlet on a circuit different from that to which the receiver is connected.

● Consult the dealer or an experienced radio/TV technician for help.

Special Symbols

The following are examples of symbols used on the UPS or accessories to alert you to important information:

RISK OF ELECTRIC SHOCK - Observe the warning associated with the risk of electric shock symbol.

CAUTION,need your attention

This symbol indicates that you should not discard the UPS or the UPS batteries in the trash. This product contains sealed, lead-acid batteries and must be disposed of properly. For more information, contact your local recycling/reuse or hazardous waste center.

This symbol indicates that you should not discard waste electrical or electronic equipment (WEEE) in the trash. For proper disposal, contact your local recycling/reuse or hazardous waste center.

Table of Contents

1 **Introduction** 5

2 **Safety Warnings** 6

3 **Installation** 7

4 **Operation** 19

5 **Communication** 34

6 **UPS Maintenance** 39

7 **Specifications** 42

8 **Troubleshooting** 48

1 Introduction

This UPS protects your sensitive electronic equipment from most common power problems, including power failures, power sags, power surges, brownouts, line noise, high voltage spikes, frequency variations, switching transients, and harmonic distortion.

Power outages might occur unexpectedly and power quality can be erratic. These power problems have potential to corrupt critical data, destroy unsaved work sessions, and damage hardware — causing hours of lost productivity and expensive repairs.

With the UPS, you can safely eliminate the effects of power disturbances and guard the integrity of your equipment. Providing outstanding performance and reliability, the UPS's unique benefits include:

- True online double-conversion technology with high power density,utility frequency independence, and generator compatibility. Output power factor up to 0.9.
- Three segment charging mode to increase battery service life, optimize recharge time.
- Selectable High Efficiency mode of operation.
- Cold start function to startup the UPS without utility.
- Standard communication options: one RS-232 communication port, one USB communication port, and relay output contacts or SNMP card.
- Power Shedding function may turn off uncritical load in battery backup to make longer backup time for critical load.
- Extended runtime with up to four Extended Battery Modules (EBPs) per UPS.
- Emergency shutdown control through the Remote Emergency Power-off (EPO) port.
- The content displayed on the interface is rich. The capacity of the loads and the battery can be seen directly and the FLASH pictures and fan rotating icon can be displayed while charging. Enhance, it is easy to know its operation status. When UPS fails, it can show the fault code; therefore, the UPS can be repaired as soon as possible by inquiring fault code table.
- NOTICE: In the manual, RT is short for Rack-Tower conversion
- Rack/Tower convertible LCD design. No matter what angle required, only pressing the key slightly to reach your perspective needs.
- For RT model, it is equipped with hot swappable battery feature needed for 19” rack solution.
- RT models in a space-optimizing 2U size fits any standard 19” rack.

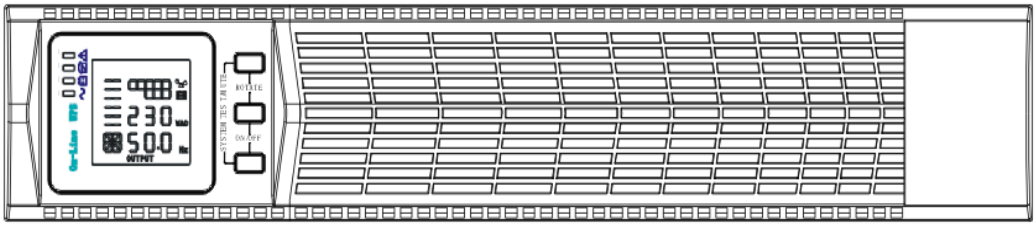

FIG.1 The Rackmount UPS front view

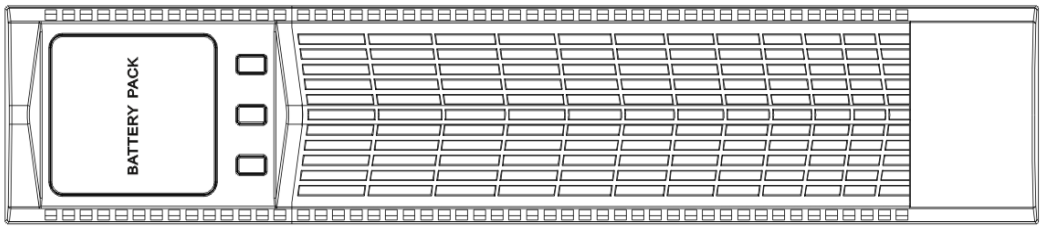

FIG.2 The Rackmount EBP front view

2 Safety Warnings

IMPORTANT SAFETY INSTRUCTIONS

SAVE THESE INSTRUCTIONS

This manual contains important instructions that you should follow during installation and maintenance of the UPS and batteries. Please read all instructions before operating the equipment and save this manual for future reference.

DANGER

The UPS contains **LETHAL VOLTAGES.** All repairs and service should be performed by **AUTHORIZED SERVICE PERSONNEL ONLY.** There are **NO USER SERVICEABLE PARTS** inside the UPS.

WARNING

- The UPS contains its own energy source (batteries). The UPS output may carry live voltage even when the UPS is not connected to an AC supply.
- To reduce the risk of fire or electric shock, install the UPS in a temperature and humidity controlled, indoor environment, free of conductive contaminants. Ambient temperature must not exceed 40°C (104°F). Do not operate near water or excessive humidity (90% maximum).
- To reduce the risk of fire, connect only to a circuit provided with branch circuit overcurrent protection in accordance with the National Electrical Code (NEC), ANSI/NFPA 70.
- Output overcurrent protection and disconnect switch must be provided by others.
- To comply with international standards and wiring regulations, the sum of the leakage current of the UPS and the total equipment connected to the output of the UPS must not have an earth leakage current greater than 3.5 milliamperes.
- If installing optional rackmount EBP(s), install the EBP(s) directly below the UPS so that all wiring between the cabinets is installed behind the front covers and is inaccessible to users. The maximum number of EBP(s) per UPS is four.

- If the UPS requires any type of transportation, verify that the UPS is unplugged and turned off and then disconnect the UPS internal battery connector.

CAUTION

- Batteries can present a risk of electrical shock or burn from high short-circuit current. Observe proper precautions. Servicing should be performed by qualified service personnel knowledgeable of batteries and required precautions. Keep unauthorized personnel away from batteries.
- Proper disposal of batteries is required. Refer to your local codes for disposal requirements.
- Never dispose of batteries in a fire. Batteries may explode when exposed to flame.

3 Installation

This section explains:

- Equipment inspection
- Unpacking the cabinet
- Checking the accessory kit
- Cabinet installation
- Wiring installation
- Initial startup

Inspecting the Equipment

If any equipment received has been damaged during shipment, keep the shipping cartons and packing materials for the carrier or place of purchase and file a claim for shipping damage. If you discover damage after acceptance, file a claim for concealed damage.
To file a claim for shipping damage or concealed damage: 1) File with the carrier within 15 days of receipt of the equipment; 2) Send a copy of the damage claim within 15 days to your service representative.

NOTE *Check the battery recharge date on the shipping carton label. If the date has expired and the batteries were never recharged, do not use the UPS. Contact your service representative.*

Unpacking the Cabinet

CAUTION

- Unpacking the cabinet in a low-temperature environment may cause condensation to occur in and on the cabinet. Do not install the cabinet until the inside and outside of the cabinet are absolutely dry (hazard of electric shock).
- The cabinet is heavy (see page 44). Be careful to unpack and move the cabinet.

Carefully to move and open the carton. Keep the components packaged until

ready to install.

To unpack the cabinet and accessories:

1. Open the outer carton and remove the accessories packaged with the cabinet.

2. Carefully lift the cabinet out of the outer carton.

3. Discard or recycle the packaging in a responsible manner, or store it for future use.

Place the cabinet in a protected area that has adequate airflow and is free of humidity, flammable gas, and corrosion.

Checking the accessories

It includes：

- UPS user's guide
- Software Suite CD
- USB cable
- Power cord (Input and output)
- RS232 cable
- If you ordered an optional Extended Battery Module (EBP), verify that the following additional item is included with the EBP:

- EBP user's guide

NOTE Discard the EBP user's guide if you are installing the EBP with a new UPS at the same time. Use the UPS user's guide to install both the UPS and the EBP.

Rackmount Installation

The Rackmount cabinet comes with all of the hardware required for installation in a standard EIA or JIS seismic Rackmount configuration with square and round mounting holes. The rail assemblies adjust to mount in 19″ racks with a distance from front to rear around 70~76 cm (27 to 30 inches) deep.

Checking the Rail Kit Accessories（Options）

Verify that the following rail kit items are included for each cabinet:

- Left rail assembly:
  - Left rail
  - Rear rail
  - (3) M5_8 pan-head screws
- Right rail assembly:
  - Right rail
  - Rear rail
  - (3) M5_8 pan-head screws
- Rail hardware kit:
  - (8) M5 butterfly nuts

- (2) rear stop brackets
- (8) M5 umbrella nuts

- Mounting bracket kit:
  - (2) mounting brackets
  - (8) M4_8 flat-head screws

Tools Required

To assemble the components, the following tools may be needed:

- cross-shaped screwdriver
- and 6 mm wrench or socket

Rackmount Setup

CAUTION

- *The cabinet is heavy. Removing the cabinet from its carton requires a minimum of two people.*
- *If installing optional EBP(S), make sure to install the EBP(S) directly below the UPS so that all wiring between the cabinets is installed behind the front covers and inaccessible to users.*

NOTE *Mounting rails are required for each individual cabinet*

To install the rail kit:

1. Assemble the left and right rails to the rear rails as shown in FIG.3.Do not tighten the screws. Adjust each rail size for the depth of your rack.

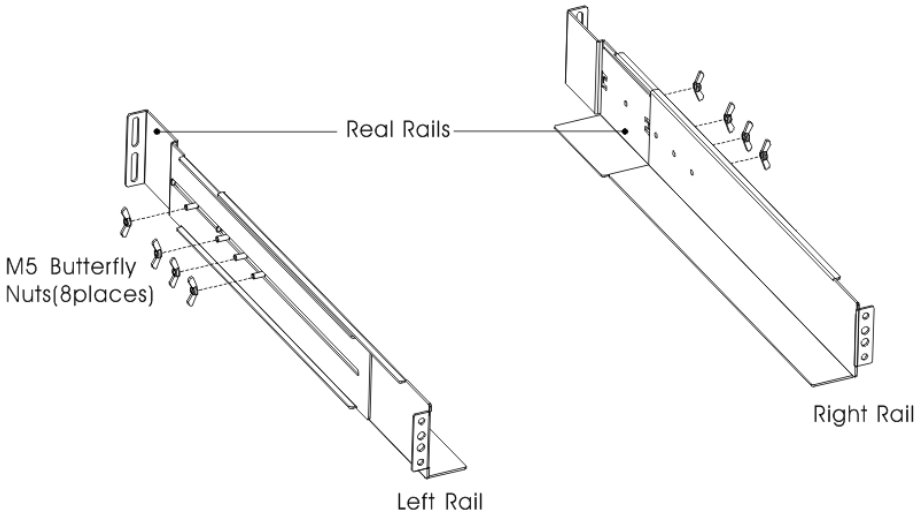

FIG.3 Securing the Rails

2. Select the proper size in the rack for positioning the UPS (see FIG. 4). The rail occupies four positions on the front and rear of the rack.
3. Tighten four M5 Umbrella Nuts in the side of rail assembly (see FIG. 3).
4. Fix one rail assembly to the front of the rack with one M5×12 pan-head screw and one M5 cage nut. Using two M5 cage nuts and two M5×12 pan-head screws, to fix the rail assembly to the rear of the rack.

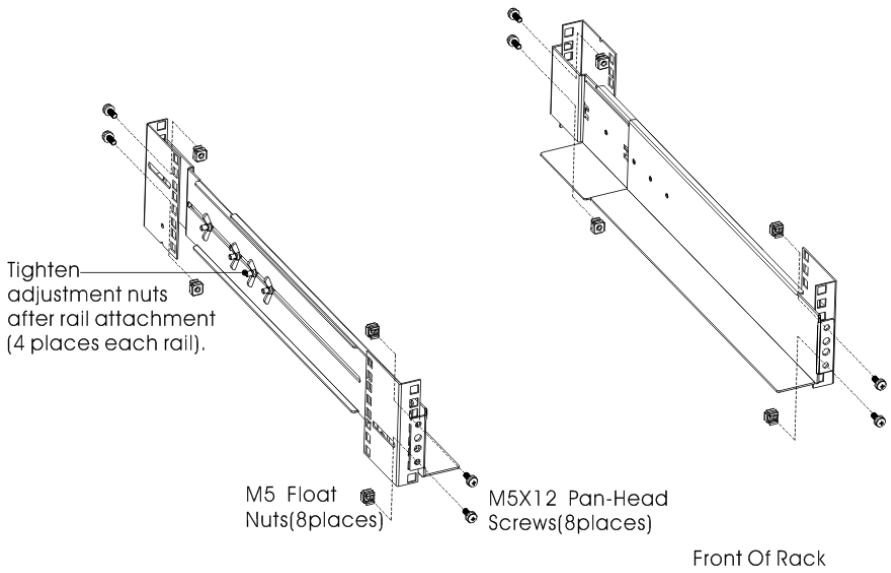

FIG.4 Fixing the Rails

5. Repeat Steps 3 and 4 for the other rail assembly.
6. Tighten the four butterfly nuts in the middle of each rail assembly.
7. If installing optional cabinets, repeat Step 1 through Step 6 for each rail kit.
8. Place the UPS on a flat, stable surface with the front of the cabinet facing to you.
9. Align the mounting brackets with the screw holes on each side of the UPS and fix with the supplied M4×8 flat-head screws(see FIG. 5)

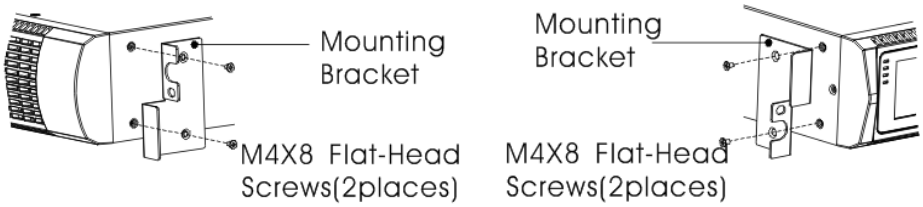

FIG.5 Installing the Mounting Brackets

10. If installing optional cabinets, repeat Step 8 and 9 for each cabinet.
11. Slide the UPS and any other optional cabinets into the rack.
12. Secure the front of the UPS to the rack using one M5×12 pan-head screws and one M5 cage nuts on each side(see FIG. 6).Install the bottom screw on each side through the bottom hole of mounting bracket and the bottom hole of the rail.
    Repeat for any optional cabinets.

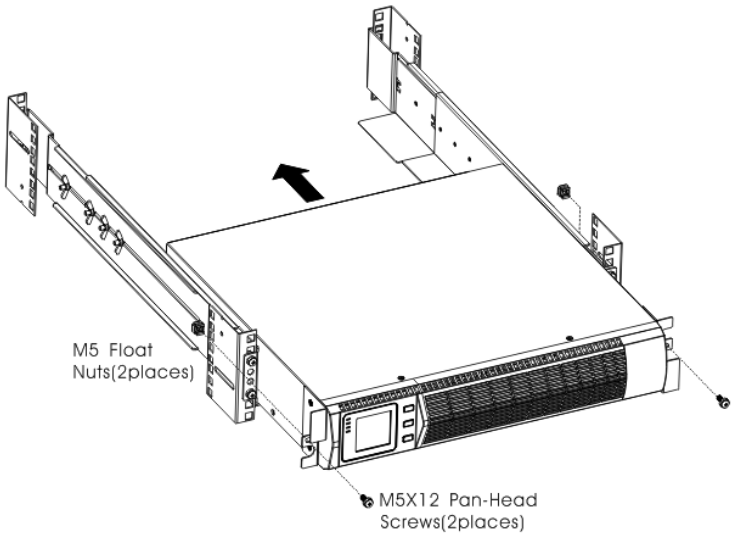

FIG.6 Securing the Front of the Cabinet

13. Continue to the following section, "Rackmount Wiring Installation.

Rackmount Wiring Installation

This section explains:

- Installing the UPS, including connecting the UPS internal batteries
- Connecting any Optional EBP(S)

Installing the UPS

NOTE *Do not make unauthorized changes to the ups; otherwise, damage may occur to your equipment and void your warranty.*

NOTE *Do not connect the ups power cord to utility until after installation is completed.*

To install the UPS:

1. Remove the front cover of each UPS

Hold the cover part without LCD on the right side and extract it(see Fig.7)

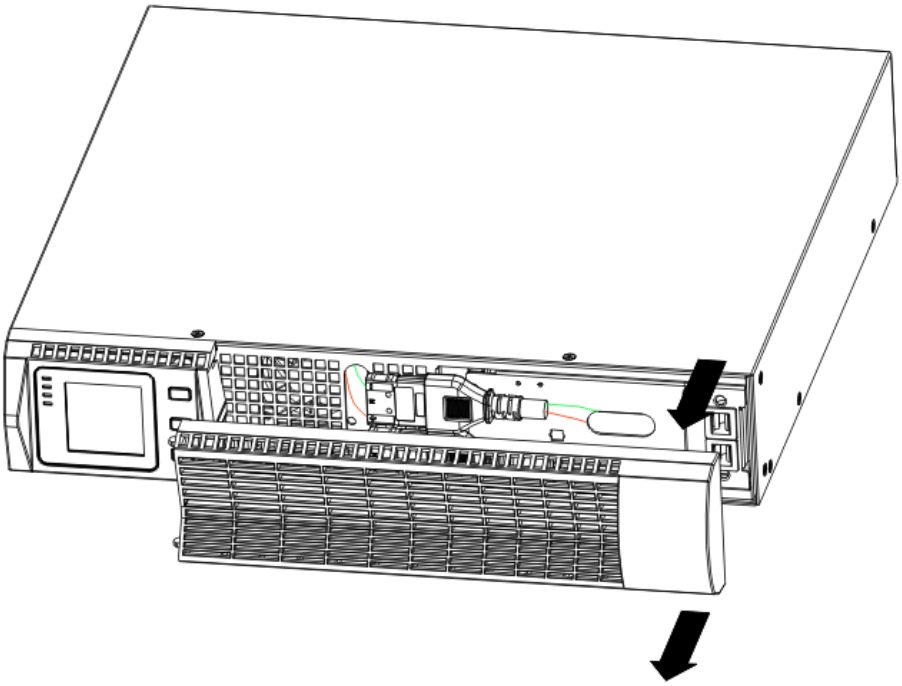

FIG.7 Extract UPS front cover

2. Connect the internal battery connector (see FIG. 8)

Connect red to red, Press the connector tightly together to ensure a proper connection.

Remarks: Please note above step 1 & 2 only for replacing batteries or adding the internal batteries. The plug will be connected properly if the UPS is with batteries installed.

CAUTION: A small amount of arcing may occur when connecting the internal batteries. This is normal and will not harm personnel. Connect the cables quickly and firmly.

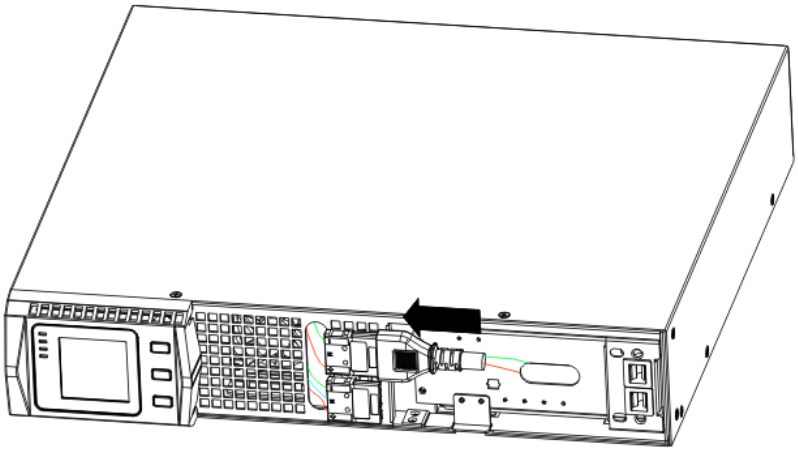

FIG.8 Connecting the UPS Internal Batteries

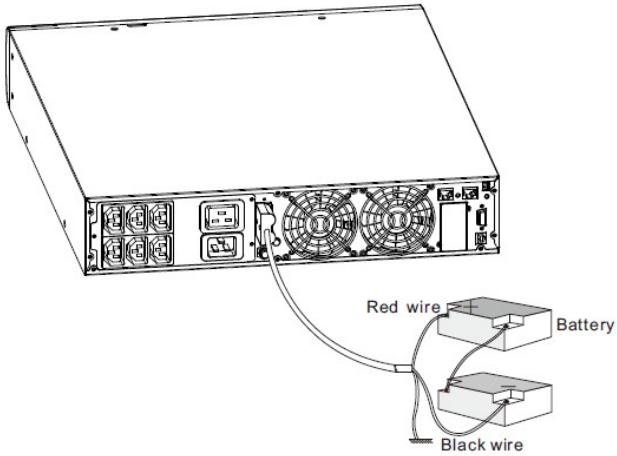

FIG.9 Long backup external battery connection

3. If you are installing EBPS, see the following section, "Connecting the EBP(s)," before continuing with the UPS installation.

4. Replace the UPS front cover.

To replace the cover, verify the EBP cable is routed through the knockout on the bottom of the cover if EBPS are installed.

Put the front cover hooks of side with display to the cover port, put another side to the other two ports, then press it until the cover and the chassis are combined tightly.

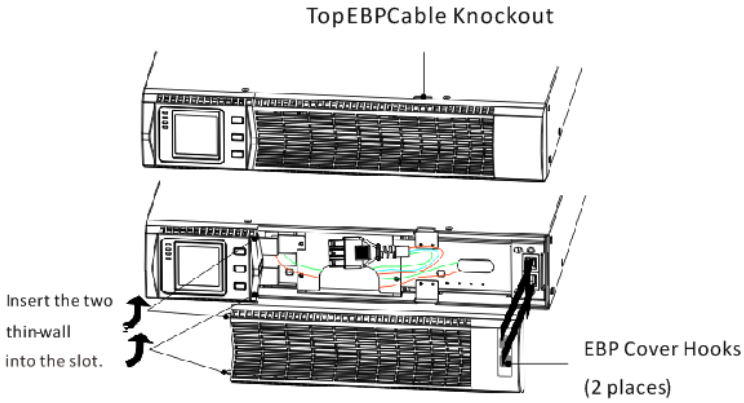

FIG.10

5. If you are installing power management software, connect your computer to one of the communication ports or optional connectivity card. For the communication ports, use an appropriate cable.

6. If your rack has conductors for grounding or bonding of ungrounded metal parts, connect the ground cable (not supplied) to the ground bonding screw. See "Rear Covers" for the location of the ground bonding screw for each model.

7. If an emergency power-off (disconnect) switch is required by local codes, see "Remote Emergency Power-off" (REPO) to install the REPO switch before powering on the UPS.

8. Continue to "UPS Initial Startup".

Connecting the EBP(s)

To install the optional EBP(s) for a UPS:

1. Remove the front cover of each EBP and UPS (see FIG. 10).

It is the same with the installation of the front cover. (Refer" To install the UPS ")

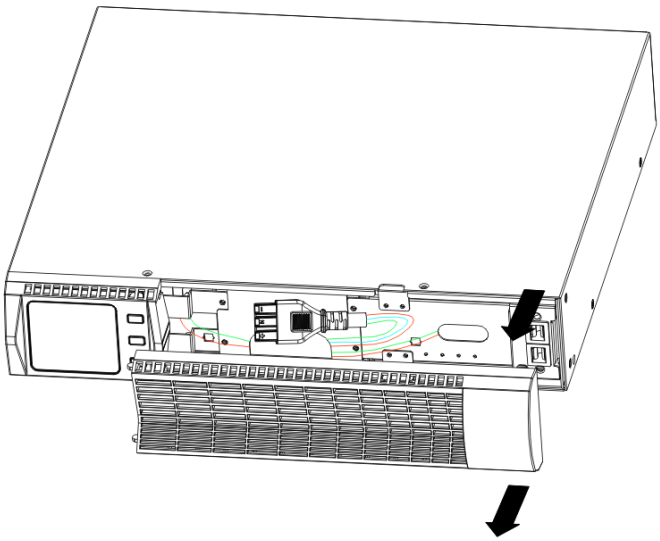

FIG.11 Removing the EBP Front Cover

2. On the bottom of the UPS front cover, remove the EBP cable knockout (see FIG. 11).

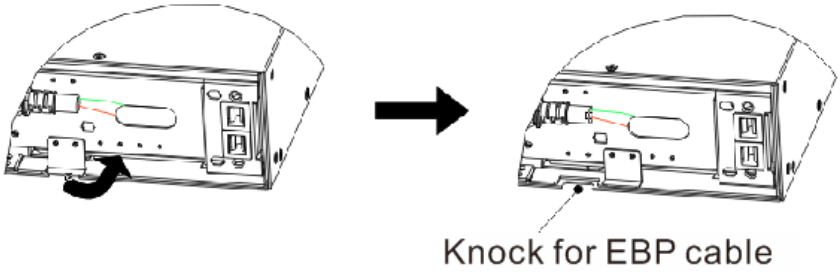

FIG.12 Removing the UPS Cable Knockout

3. For the bottom (or only) EBP, remove the EBP cable knockout on the top of the EBP front cover. See FIG. 12 for the location of the top EBP cable knockout.
4. If you are installing more than one EBP, for each additional EBP remove the EBP cable knockout on the top and bottom of the EBP front cover. See FIG. 12 for the location of the EBP cable knockouts.

CAUTION

A small amount of arcing may occur when connecting an EBP to the UPS. This is normal and will not harm personnel. Insert the EBP cable into the UPS battery connector quickly and firmly.

5. Plug the EBP cable(s) into the battery connector(s) as shown in FIG. 12. Up to four EBPS may be connected to the UPS. Connect black to black,. Press the connector tightly together to ensure a proper connection.

To connect a second EBP, unclip the EBP connector on the first EBP and pull gently to extend the wiring to the EBP connector on the second EBP. Repeat for any additional EBPS.

6. Verify that the EBP connections are tight and the adequate bend radius and strain relief exist for each cable.

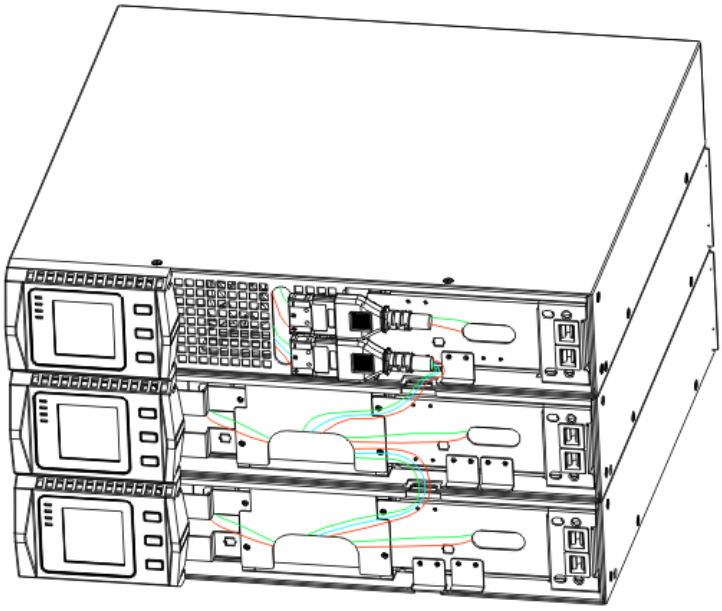

FIG.13 Typical EBP Installation

7. Replace the EBP front cover.

To replace the cover, verify that the EBP cables are routed through the EBP cover knockouts, cover connects with the cover hook near the left side of the EBP cabinet. Repeat for each additional EBP. It is the same with the installation of the front cover. (Refer" to UPS installation")

8. Verify that all wires connected between the UPS and EBP(s) are installed behind the front covers and not accessible to users.
9. Return to Step 4 to continue the UPS installation.

Rackmount converted to Tower Installation

1. Rackmount converted to Tower plastic base installation

① two plastic base brackets ② flatten it after intercrossing intercross as following FIG.

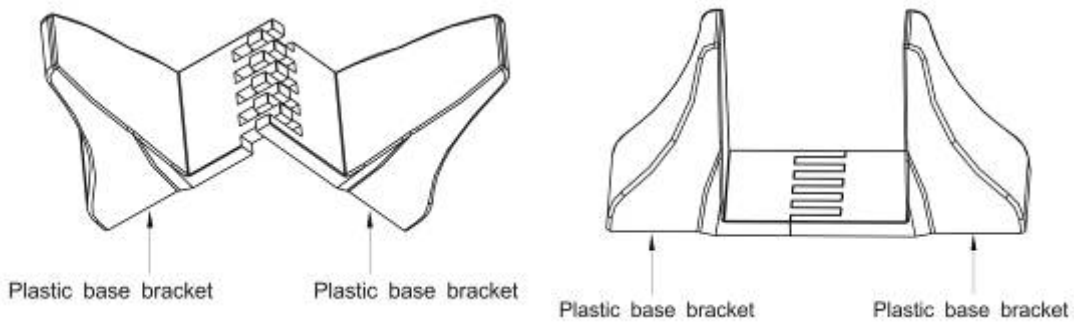

FIG.14 plastic base installation

③If an EBP is needed to be placed in the middle, the assembly of plastic base is similar.
The difference is that two 1U plastic base extended boards are added in the middle.(as the following shows)

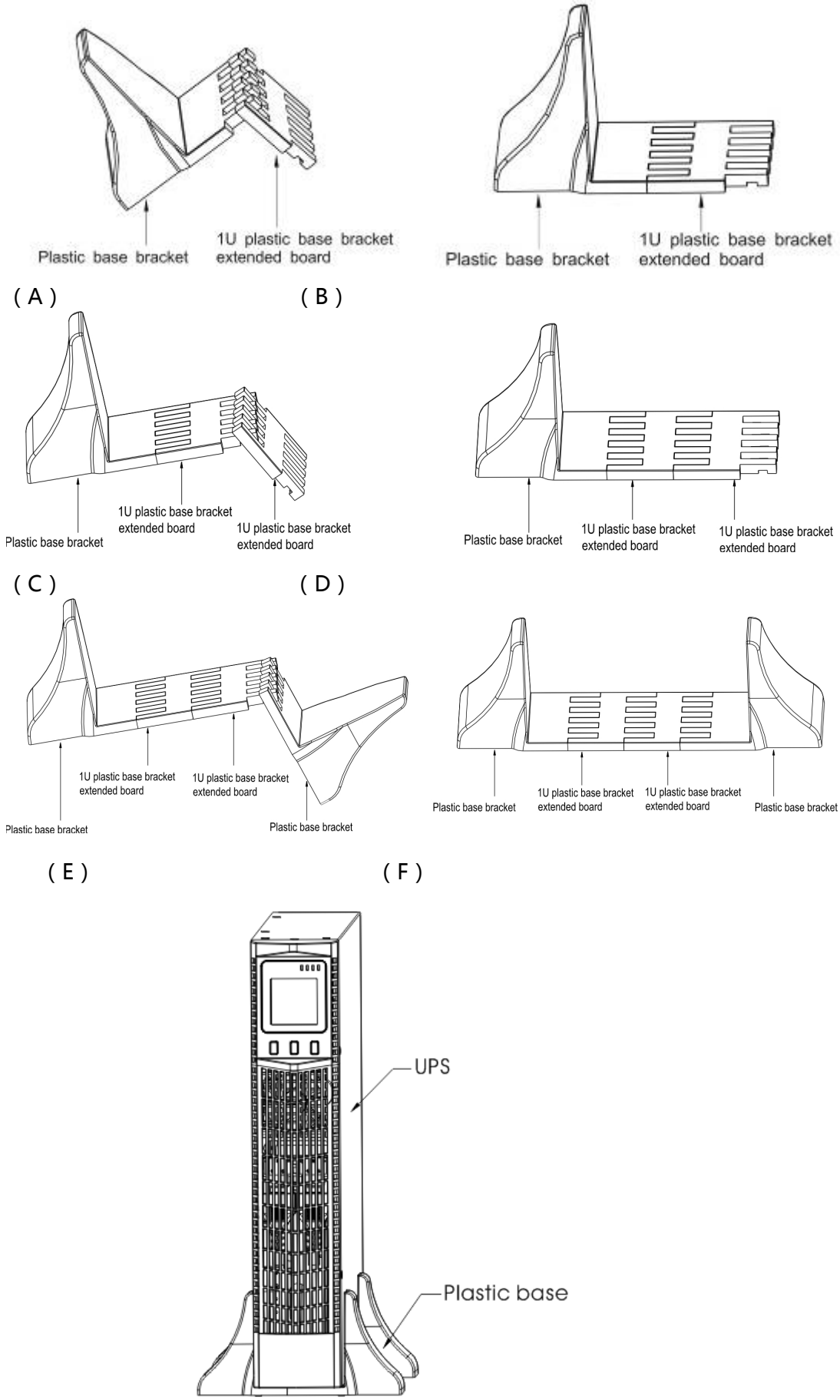

FIG.15 increase EBP plastic base installation

2. The installation between UPS and EBPS can be referred to Fig.16

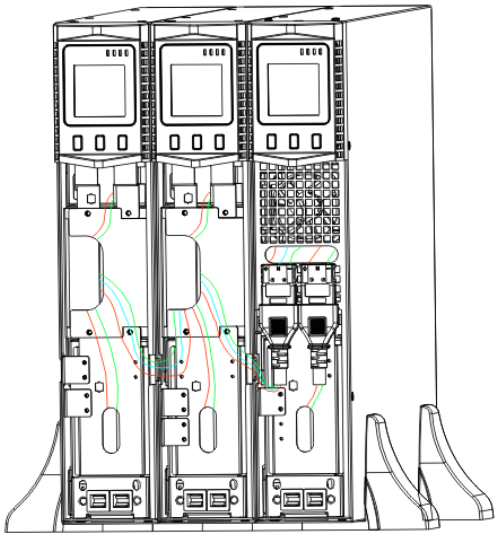

FIG.16 The installation for UPS and battery box

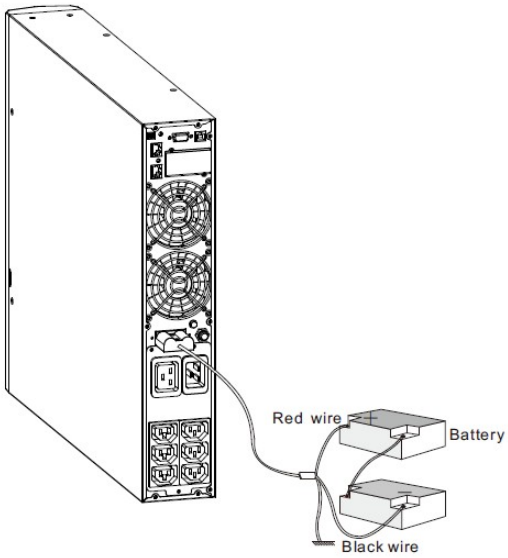

FIG.17 Long backup external battery connection

1.Install the base, then place the RT UPS on the base one by one as Fig.16 shows.

2. The cover installation and cable connection of the UPS and EBPS are the same as RT. (To install the optional EBP(s) for a UPS)

UPS Initial Startup

To start up the UPS:

NOTE Verify that the total equipment ratings do not exceed the UPS capacity to prevent an overload alarm.

1. If optional EBPs are installed, verify that the EBPs are connected to the UPS.
2. Plug the equipment to be protected into the UPS, but do not turn on the protected equipment.

3. Make any necessary provisions for cord retention and strain relief.
4. Plug the detachable UPS power cord into the input connector on the UPS rear cover.
5. Plug the UPS power cord into a power outlet. The UPS front cover display illuminates.
6. The U P S will do self-test when power on. After that, the charger will charge the battery. If the output displayed on LCD is "0", there is no output. If you need the UPS output the utility without starting the UPS when plug into the utility , you need to set bPS option to "ON" on the setting mode,refer to Page 26.
7. Press the combination start up buttons on the UPS front cover for at least half a second. The UPS will start up and the LED will turn on and off sequentially.
8. Check the UPS front cover display for active alarms or notices. Resolve any active alarms before continuing. See Troubleshooting" on page 49. If the ⚠ indicator is on, do not proceed until all alarms are clear.Check the UPS status from the front cover to view the active alarms. Correct the alarms and restart if necessary.
9. Verify that the ∿ indicator illuminates solid, indicating that the UPS is operating normally and any loads are powered.
10. If optional EBPs are installed, see "Configuring Battery settings" on page 28 to set the number of installed EBPs.
11. To change any other factory-set defaults, see "User settings" on page 25.

NOTE: At initial startup, the UPS sets system frequency according to input line frequency (input frequency auto-sensing is enabled by default).

NOTE: At initial startup , please set the output voltage needed before start up the UPS , After the subsequent startup , the UPS will output the setting voltage.

12. If you installed an optional EPO, test the EPO function: Activate the external EPO switch. Verify the status change on the UPS display. Deactivate the external EPO switch and restart the UPS.

NOTE **:** The internal batteries charge to 80% capacity in less than 5 hours. However, we recommend that the batteries should be charged for 48 hours after installation or long-term storage. If optional EBPs are installed, see the recharge times listed in Table 21 on page 48.

4 Operation

This chapter contains information on how to use the UPS, including front cover operation, operating modes, UPS startup and shutdown, transferring the UPS between modes, and configuring bypass settings, load segments, and battery settings.

Control Cover Functions

The UPS has a three-button segmental LCD with backlight. It provides useful information about the UPS itself, load status, measurements, and settings (see FIG. 18).

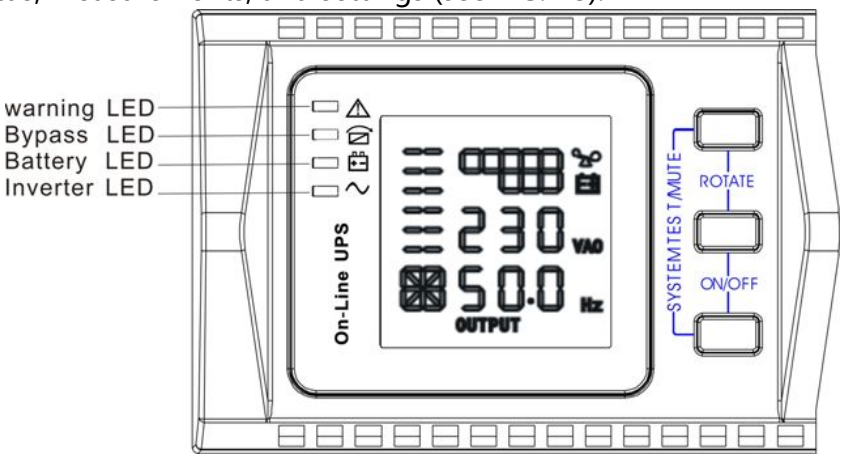

FIG.18 Control Cover

Table 1. Indicator Descriptions

Indicator	Description
Red	On The UPS has an active alarm or fault.
Yellow	On The UPS is in Bypass mode. The UPS is operating normally on bypass during High Efficiency operation.
Yellow	On The UPS is in Battery mode.
Green	On The UPS is operating normally.
NOTE When power on or startup , these indicators will turn on and off sequentially. ***NOTE*** On different operation modes , these indicators will indicate differently. Refer to Table 7.	

Table 2. Button function

Button	Function description
Start up combination (↵+▼)	RT Press and hold this key for more than half a second to turn on the UPS or to turn off the UPS.
Shutdown/Rotating combination (▼ +▲)	RT Press and hold this key for more than 2 seconds to circumrotate the LCD .

Battery test/Mute combination (↵+ ▲)	Press and hold the key for more than 1 second in Line mode or economic(ECO) mode: UPS runs self-test function. Press and hold the key for more than 1 second in battery mode: UPS runs mute function.
Scroll ▲ or ▼	Non-function setting mode: Press and hold the key for more than half a second (less than 2 seconds): Indicate the items of the LCD item section orderly. Press and hold this key for more than 2 seconds: Circularly and orderly display the items every 2 seconds, when press and hold the key for some time again, it will turn to output status. Function setting mode: Press and hold the key for more than half a second (less than 2 seconds): Select the set option.
Setting entry ↵	Non-function setting mode: Press and hold the key for more than 2 seconds: Function setting interface. Function setting mode: Press and hold the key for more than half a second (less than 2 seconds): Affirm the set option. Press and hold the key for more than 2 seconds, exit from this function setting interface.

Table 3. The corresponding working status of indications

NO	Working status	Indication				Warning	Remarks
		Nor	Bat	Bps	Fau		
1	Line mode						
	Normal	●				None	
	High/low voltage protection, turn to battery mode	●	●		★	Once every four seconds	
2	Battery mode						
	Normal voltage	●	●		★	Once every four seconds	
	Battery Voltage abnormal warning	●	★		★	Once per second	
3	Bypass mode						

	Main AC Normal voltage in bypass mode			●	★	Once every two minutes	Eliminate after starting the UPS
	Main AC high voltage warning in bypass mode				★	Once every four seconds	
	Main AC low voltage warning in bypass mode				★	Once every four seconds	
4	Battery disconnect warning						
	Bypass mode			●	★	Once every four seconds	Affirm if the battery switch is closed
	Inverting mode inverting mode	●			★	Once every four seconds	Affirm if the battery switch is closed
	Power up or start					Six times	Affirm if the battery is connected well
5	Output overload protection						
	Overload warning in line mode,	●			★	Twice per second	Remove the uncritical loads
	Overload in line mode, protection			●	●	Long beeps	Remove the uncritical loads
	Overload warning in battery mode	●	●		★	Twice per second	Remove the uncritical loads
	Overload in battery mode, protection	●	●		●	Long beeps	Remove the uncritical loads
6	Overload warning in bypass mode			●	★	Once every 2 seconds	Remove the uncritical loads
7	Fan fault (fan	▲	▲	▲	★	Once	Check if the fan is

	icon flashing)					every 2 seconds	blocked by object.
8	Fault mode				●	Long beeps	If display fault code and icon⚠lights, contact for maintenance when you can’ t deal with it by yourself.

● _indicator lights for a long time
★ _indicator flashes
▲ _the status of indicator depends on other conditions

Display Functions

As the default or after 5 minutes of inactivity, the LCD displays the output parameters.
The backlit LCD automatically dims after 5 minutes of inactivity. Press any button to restore the screen.
LCD display comprises numerical value section, capacity graphics section, fan-status graphics section and charger-status graphics section , refer to Table 4 for detail.

Table 4. LCD display section

Section	Description	Graphic
Numerical value section	Display the corresponding numerical value of inquiring items(output, load, temperature, input, battery), for example, as the graphics shows above, the output voltage is 230v, the output frequency is 50Hz.	
Capacity graphics section	Display the capacity of the battery and load. Every pane represents 20 % capacity. As graphics shown above, the load reaches 80 % -100 % (5 panes), the capacity of the battery is 40 % -60 % (3 panes). When UPS is overloaded, the icon will flash, when battery is weak or disconnected, the icon will also flash.	
Fan-status graphics section	Display if the fan works normally. When the fan works normally, it will show the dynamic fan blades rotating; when the fan works abnormally, the icon ✳ will keep on flashing with the warning .	

Charger-status graphics section	Display the status of the charger. When charger works normally, the corresponding icon will vary dynamically and orderly. when charger works abnormally, the icon will keep flashing When UPS is in battery mode, the number of the icons of the charger-state section will vary according to the changeable capacity of the battery (pane).	

Parameters inquiring

Press and hold the scroll key or for more than half a second(less than 2 seconds) to inquire about items. The inquired items include input, battery, output, load, temperature.。Press and hold the scroll key for more than 2 seconds, LCD begins to display the items circularly and orderly which transfer to another every 2 seconds. Press and hold the key for some time again, it will return to output status.

Table 5. Parameters inquiring

Item	Description	Graphic
Output	Display the output voltage and output frequency of the UPS. As the following graphic shown, the output voltage is 230v & the output frequency is 50Hz.	
Load	Display the numerical value of the active power(WATT) and apparent power(VA) of the load. For example, as the following graphics shown: the WATT of the load is 100w, VA is 100VA (when disconnect load, it is a normal phenomenon to show a small numerical value of WATT and VA).	

Temperature	Display the temperature of the inverter in the UPS. As the following graphics shown: the temperature of the inverter is 37℃.	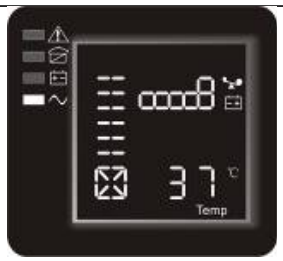
Input	Display the voltage and frequency of the input. As the following graphics shown: the input voltage is 210v, input frequency is 49.8Hz.	
Battery	Display the voltage and capacity of the battery . As the following graphics shown: the battery voltage is 38v, the capacity of battery is 100％(the capacity of battery is approximately reckoned according to the battery voltage).	
Battery remaining time	Display the battery remaining time when under battery mode. The number is from 0 to 999 minutes. As the following graphics shown: there are 686 minutes left for discharging.	
System software Version	System software Version: Display the system software version. As the following graphics shows: the System software Version is 04.	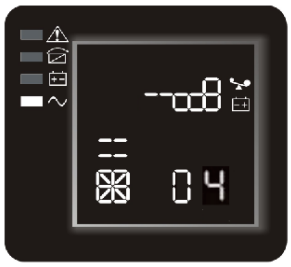

User Settings

The UPS has setting functions. This user settings can be done under any kind of UPS working mode. The setting will take effect under certain condition. Below table describes how to set the UPS.

Table 6. User Settings

Setting function(serial number)	Setting procedure	LCD display

ECO function setting(1)	① Enter the setting interface. Press and hold the function setting key for more than 2 seconds, then come to setting interface, the letters "ECO" will flash. ② Enter the ECO setting interface. Press and hold the function setting key for more than half a second(less than 2 seconds), the letters "ECO" will stop flash. The "ON" (or OFF) below the ECO will flash. Press and hold the scroll key for more than half a second (less than 2 seconds) to determine whether the ECO function is enabled or disabled. ③ Confirm the ECO selecting interface. After selecting ON or OFF, press and hold the function setting key for more than half a second (less than 2 seconds). Now, the ECO setting function is completed and the "ON" or "OFF" below the "ECO" will light without flash. ④ If you choose "OFF" , then go to step 7, otherwise go ahead to step 5. ⑤ Set the ECO tolerance range. Short press the scroll key or for more than half a second (shorter than 2 seconds)to select the voltage range in percentage. +5%, +10%,+15%,+25%(default is +25%) , then short press function setting key for more than half a second (shorter than 2 seconds)to confirm the selection, then to set the minus range ⑥ To set the minus range in the same way. ⑦ After the minus range is confirmed. Long press function setting key for more than 2 seconds to exit setting menu.	
Bypass function setting(2)	① Enter the setting interface. Press and hold the function setting key for more than 2 seconds, then come to setting interface ,short press the scroll key for more than half a second (less than 2 seconds) to select BPS setting, the letters "bPS" will flash. ②Enter the BPS setting interface. Press and hold the function setting key for more than half a second(less than 2 seconds) at this time, the letters "bPS" will stop flashing. The "ON" (or OFF) below the bPS will flash. Press and hold the scroll key for more than half a second (less than 2 seconds) to determine whether the BPS function is enabled or disabled. ③ Confirm the BPS selecting interface. After selecting ON or OFF, press and hold the function setting key for more than half a second (less than 2 seconds). Now, the BPS setting function is completed and the "ON" or "OFF" below the "bPS" will light without flashing. ④ If you choose "OFF" , then go to step 7, otherwise	

	go ahead to step 5. ⑤ Set the BPS tolerance range. Short press the scroll key ▲ or ▼ for more than half a second (shorter than 2 seconds)to select the voltage range in percentage. +5%, +10%,+15%,+25%(default is +25%) , then short press function setting key ↵ for more than half a second (shorter than 2 seconds)to confirm the selection, then to set the minus range ⑥ To set the minus range in the same way. ⑦ After the minus range is confirmed. Long press function setting key ↵ for more than 2 seconds to exit setting menu.	
Output voltage setting(3)	① Enter the setting interface. Press and hold the function setting key for more than 2 seconds, then come to setting interface, Press and hold the scroll key for more than half a second(less than 2 seconds), select the function setting, choose output voltage setting interface, at the moment, the letters "OPU" will flash. ② Enter the output voltage selecting interface. Press and hold the function setting key for more than half a second(less than 2 seconds), then come to setting interface of output voltage OPU, at this time, the letters "OPU" will light for a long time. The numerical value below the OPU will flash. Press and hold the scroll key for more than half a second (less than 2 seconds), select the numerical value in accordance with "OPU" function. The provided voltages are 208v, 220v, 230v, 240,you can choose any one of them by yourself (The default is 220v). ③ Confirm the output voltage selecting interface. After selecting numerical value, press and hold the function setting key for more than half a second (less than 2 seconds). Now, the OPU setting function is completed and the numerical value below the "OPU" will light without flashing. ④ Exit from the setting interface. Press and hold function setting key for more than half a second (less than 2 seconds), exit from the setting interface and return to main interface.	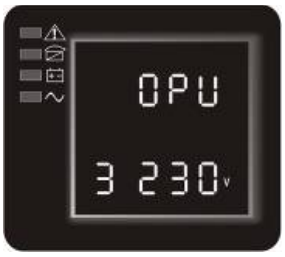
Battery Pack (EBP)number and type setting(4)	① Enter the setting interface. Press and hold the function setting key for more than 2 seconds, then come to setting interface, Press and hold the scroll key for more than half a second(less than 2 seconds), select the function setting, choose battery setting interface, at the moment, the letters "bAt" will flash. ② Enter the battery setting interface. Press and hold the	

	function setting key for more than half a second(less than 2 seconds), then come to setting interface of battery, the letters "bAt" will stop flashing. The numerical value below the "bAt" will flash. Press and hold the scroll key for more than half a second (less than 2 seconds), select the numerical value in accordance with the real connected battery strings. ③ Confirm the battery strings setting interface。 After selecting numerical value, press and hold the function setting key for more than half a second (less than 2 seconds). Now, the battery strings setting is confirmed and the battery type value below will flash。 ④ Set the battery type in the same way. ⑤Exit from the setting interface. Press and hold function setting key for more than half a second (less than 2 seconds), exit from the setting interface and return to main interface.	
Load segment setting (5)	① Enter the setting interface. Press and hold the function setting key for more than 2 seconds, then come to setting interface, Press and hold the scroll key for more than half a second(less than 2 seconds), select the function setting, choose battery setting interface, at the moment, the letters "Seg 1" will flash. ② Enter the load segment setting interface. Press and hold the function setting key for more than half a second(less than 2 seconds), then come to setting interface of load segment, the letters "Seg 1" will stop flashing. The numerical value below the "Seg 1" will flash. Press and hold the scroll key for more than half a second (less than 2 seconds), select the battery voltage, 10.5v , 11.0v , 11.5v(default is 10.5v)。 ③ Confirm the power shedding shielding battery voltage setting. After selecting numerical value, press and hold the function setting key for more than half a second (less than 2 seconds). Now, the load shielding battery voltage setting is confirmed. ④ Exit from the setting interface. Press and hold function setting key for more than half a second (less than 2 seconds), exit from the setting interface and return to main interface.	

Automatic Battery Test mode setting(6)	Enter the setting interface. Press and hold the function setting key ↵ for more than 2 seconds, then come to setting interface, Press and hold the inquiring key ▲ for more than half a second(less than 2 seconds), select the function setting, choose Automatic Battery Test setting interface, at the moment, the letters “Abt” will flash ② Enter the “Abt” setting interface. Press and hold the function setting key ↵ for more than half a second(less than 2 seconds), then come to setting interface of “Abt”, at this time, the letters “Abt” will light for a long time. The “ON”(or OFF) below the “Abt” will flash. Press and hold the inquiring key ▲ for more than half a second (less than 2 seconds) to determine whether the “Abt” function is used or not. If used, the corresponding word is “ON”, if not, the word is “OFF”. It can be determined by yourself. ③ Confirm the “Abt” selecting interface. After selecting ON or OFF, press and hold the function setting key ↵ for more than half a second (less than 2 seconds). Now, the “Abt” setting function is completed and the “ON” or “OFF” below the “Abt” will light without flash. ④ Exit from the setting interface. Press and hold function setting key ↵ for more than half a second (less than 2 seconds), exit from the setting interface and return to main interface. If used, the corresponding word is “ON”,One month periodically check the battery connections.	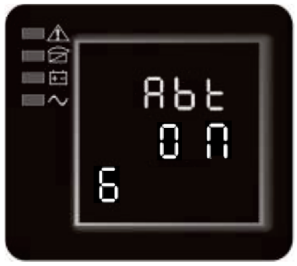

Warning Code Display mode setting(7)	① Enter the setting interface. Press and hold the function setting key for more than 2 seconds, then come to setting interface, Press and hold the inquiring key for more than half a second(less than 2 seconds), select the function setting, choose Warning Code Display setting interface, at the moment, the letters “wc” will flash ② Enter the “wc” setting interface. Press and hold the function setting key for more than half a second(less than 2 seconds), then come to setting interface of “wc”, at this time, the letters “Abt” will light for a long time. The “ON”(or OFF) below the Abt will flash. Press and hold the inquiring key for more than half a second (less than 2 seconds) to determine whether the “wc” function is used or not. If used, the corresponding word is “ON”, if not, the word is “OFF”. It can be determined by yourself. ③ Confirm the “wc” selecting interface. After selecting ON or OFF, press and hold the function setting key for more than half a second (less than 2 seconds). Now, the “wc” setting function is completed and the “ON” or “OFF” below the “wc” will light without flash. ④ Exit from the setting interface. Press and hold function setting key for more than half a second (less than 2 seconds), exit from the setting interface and return to main interface. If used, the corresponding word is “ON”,2~5 seconds cycle Warning Code, please refer to Warning Code information Table in Table 24.	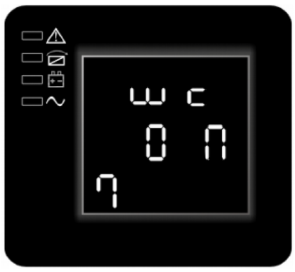
EPO Input Polarity setting (8)	① Enter the setting interface. Press and hold the function setting key for more than 2 seconds, then come to setting interface, Press and hold the scroll key for more than half a second(less than 2 seconds), select the function setting, choose EPO Input polarity setting interface, the letters “EPO” will flash. ②Enter the EPO Input Polarity setting interface. Press and hold the function setting key for more than half a second(less than 2 seconds) , the letters “EPO” will stop flashing. The letters below the “EPO” will flash. Press and hold the scroll key for more than half a second (less than 2 seconds), select the EPO input polarity, “+P” (open circuit execute EPO function) or “–P” (short circuit execute EPO function) ③Confirm the setting. After selecting EPO input polarity, press and hold the function setting key for more than	

	half a second (less than 2 seconds). Now, the setting is confirmed. ④ Exit from the setting interface. Press and hold function setting key for more than half a second (less than 2 seconds), exit from the setting interface and return to main interface.	
(Battery) End of discharge setting (9)	Enter the setting interface. Press and hold the function setting key for more than 2 seconds, then come to setting interface ,short press the scroll key for more than half a second (less than 2 seconds) to select Eod setting, the letters “Eod” will flash. ②Enter the Eod setting interface. Press and hold the function setting key for more than half a second(less than 2 seconds) at this time, the letters “Eod” will stop flashing. ③Set the Eod tolerance range. Short press the scroll key or for more than half a second (shorter than 2 seconds)to select the voltage range in percentage. 10.0V, 10.5V, 11.0V (default is 10.0V) , then short press function setting key for more than half a second (shorter than 2 seconds)to confirm the selection, then to set the minus range	
Frequency Converter mode setting (10)	①Enter the setting interface. Press and hold the function setting key for more than 2 seconds, then come to setting interface, Press and hold the scroll key for more than half a second(less than 2 seconds), select the function setting, choose output frequency setting interface, the letters “OPF” will flash. ② Enter the output frequency of converter mode setting interface. Press and hold the function setting key for more than half a second(less than 2 seconds) , the letters “OPF” will stop flashing. The letters below the “OPF” will flash. Press and hold the scroll key for more than half a second (less than 2 seconds), select the output frequency, “50Hz” (output fixed to 50Hz and active converter mode) or “60Hz” (output fixed to 60Hz and active converter mode) or “IPF” (inactive converter mode and active normal mode) ③ Confirm the setting. After selecting converter mode output frequency, press and hold the function setting key for more than half a second (less than 2 seconds). Now, the setting is confirmed. ④ Exit from the setting interface. Press and hold function setting key for more than half a second (less than 2 seconds), exit from the setting interface and	 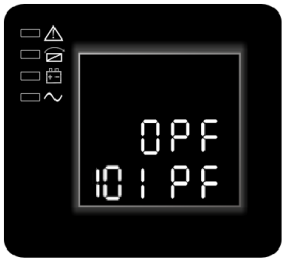

	return to main interface. **IPF:**UPS output frequency with the same frequency as the mains input. **50.0Hz:**UPS output frequency is fixed at 50.0Hz, independent of the mains input frequency. **60.0Hz:**UPS output frequency is fixed at 60.0Hz, independent of the mains input frequency.	

Table 7. Operating Modes

Mode	Description	Indicator
Line Mode	The inverter green LED is on. When input AC mains is in line with the working conditions, UPS will work in line mode,charge the battery and protect the load.	
Battery Mode	Both the inverter green LED and battery yellow LED are on, the buzzer beeps once every 4 seconds. The warning red LED is on when beeping. When the mains power down or instable, UPS will turn to battery mode at once. If the mains recovers,the UPS will transfer to line mode. If battery low alarm activates, the indicator of flashes. If battery voltage reaches low limit, UPS will turn off to protect the battery. UPS will auto-restart when the mains recover. ⚠**NOTE** : The back up time of battery mode is subject to the load and EBP numbers. Battery remaining time displayed on the LCD may not be accurate.	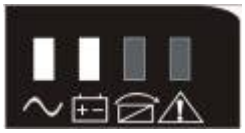
Bypass Mode	Bypass yellow LED is on, the buzzer beeps once every 2 minutes . The warning red LED is on when beeping, LCD displays are according to the exact load and battery capacity. Bypass tolerance can be set by LCD. Under below conditions, the UPS will transfer to bypass mode: ● BPS on set by user through LCD, and the UPS is turned off. ● BPS on set by user through LCD, and the UPS is plugged into utility but not turned on. ● Overload on line mode or ECO mode. ⚠**NOTE** : When in bypass mode , the load is not protected.	

ECO Mode	Both the inverter green LED and bypass yellow LED are on. When ECO enabled and the utility is in range, the UPS will work on ECO mode. If the utility in out of ECO range but still in Line range, the UPS will transfer to line mode. Utility tolerance of ECO mode can be set。	
Fault Mode	When the UPS has fault. The warning red LED is on and the buzzer beeps. The UPS will turn to fault mode. The UPS cuts off the output and the LCD display fault codes. At the moment, you can press the mute key to make the buzzer stop beeping temporarily to wait for maintenance. You can also press the OFF key to shut down the UPS when confirm that there is no serious fault. NOTE: As for corresponding information of the fault code, please refer to Table 24 Fault Code.	
Standby Mode	When UPS is plugged into line and not turn on , the UPS will work in standby mode to charge the battery. No indicator displays on this mode.	

UPS Turn on and Turn off

Start up operation

Turn on the UPS in line mode

1. Once mains power is plugged in, the UPS will charge the battery, at the moment, the LCD shows that the output voltage is 0, which means the UPS has no output. If it is expected to have the output of bypass, you can set the bps "ON" by LCD setting menu.
2. Press and hold the ON key for more than half a second to start the UPS, then it will start the inverter.
3. Once started, the UPS will perform a self-test function, LED will light and go out circularly and orderly. When the self-test finishes, it will come to line mode, the corresponding LED lights, the UPS is working in line mode.

Turn on the UPS by DC without mains power

1. When mains power is disconnected, press and hold the ON key for more than half a second to start UPS.
2. The operation of the UPS in the process of start is almost the same as that when mains power is in. After finishing the self-test, the corresponding LED lights and the UPS is working in battery mode.

Turn off operation

Turn off the UPS in line mode

1. Press and hold the OFF key for more than half a second to turn off the UPS and inverter.
2. After the UPS shutdown, the LEDs go out and there is no output. If output is needed, you can set bps "ON" on the LCD setting menu.

Turn off the UPS by DC without mains power

1. Press and hold the OFF key for more than half a second to turn off the UPS.
2. When turning off the UPS, it will do self-testing firstly. The LEDs light and go out circularly and orderly until there is no display on the cover.

UPS self-test/mute test operation.

1. When the UPS is in line mode, press and hold the self-test/mute key for more than 1 second, the LEDs light and go out circularly and orderly. The UPS comes to self-test mode and tests its status. It will exit automatically after finishing testing, and the LED indication will go back to previous status.
2. When the UPS is in battery mode, press and hold the self-test/mute key for more than 1 second, the buzzer stops beeping. If you press and hold the self-test/mute key for one more second, it will restart to beep again.

Configuring Battery Settings

Set the UPS for the number of EBPs installed.
To ensure maximum battery runtime, configure the UPS for the correct number of EBPs, refer to Table 8 for the appropriate setting of battery numbers and type.
Use the up and down scroll keys to select the number of battery strings according to your UPS configuration:

Table 8. Battery number Configuration

All UPS and EBP Cabinets	Number of Battery Strings
UPS only (internal batteries)	1 (default)
UPS+1EBP	3
UPS+2EBPs	5
UPS+3EBPs	7
UPS+4EBPs	9
NOTE The UPS contains one battery string; each EBP contains two battery strings.	

CAUTION

- The following process must be performed if the UPS is connected with generator.
- First, turn on the generator, after it runs stably connect output power of the generator to UPS input terminal, then turn on the UPS. After the UPS is turned on, please connect load one by one.
- It is recommended that the generator capacity is as twice as the UPS rated capacity.
- You had better not use the ECO mode when the quality of the input AC mains is not good.

5 Communication

This section describes the:

- Communication ports (RS-232 and USB)
- Connectivity cards
- Emergency Power-off (EPO)
- Load Segments
- UPSilon2000 Power Management Software

See "Rear Covers" on page 49 for rear cover diagrams for each model.

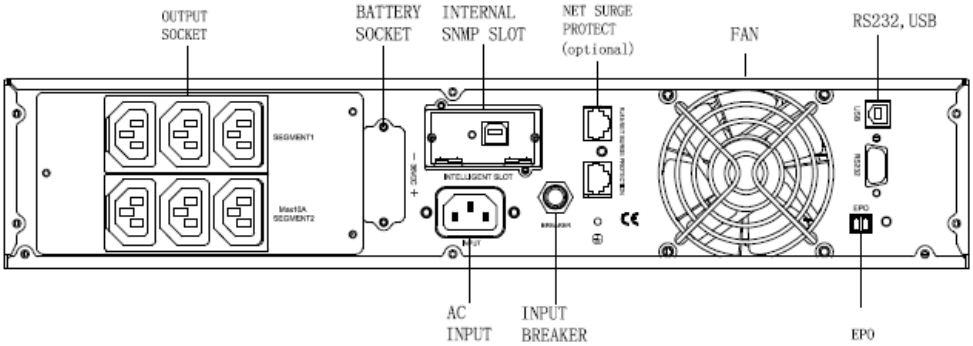

FIG.19 .

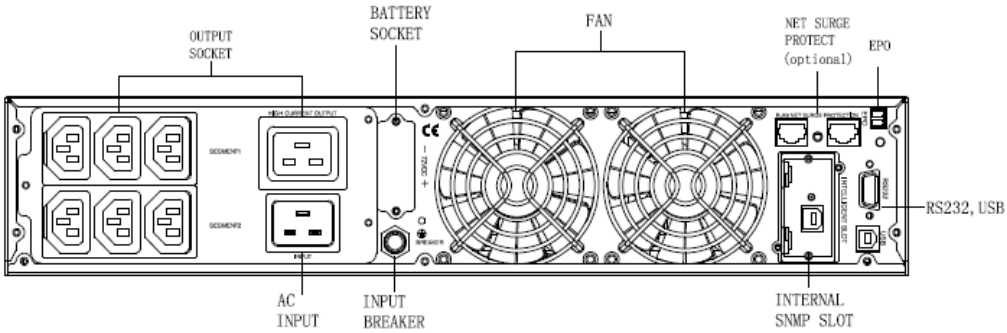

FIG.20

Communication Options and Control Terminals

Installing Communication Options and Control Terminals

To install the communication options and control terminals:

1. Install the appropriate connectivity card and/or necessary cable(s) and connect the cables to the appropriate location.
2. Route and tie the cable(s) out of the way.
3. Continue to "Operation" on page 19 to start up the UPS.

Communication Options

The UPS has serial communication capabilities through the USB and RS-232 communication ports or through a connectivity card in the available communication bay. The UPS supports two serial communication devices according to the following table:

Independent	Multiplexed	
Communication Bay	**USB**	**RS-232**
Any connectivity card	Available	Not in use
Any connectivity card	Not in use	Available

NOTE **:** *The communication speed of the RS232 port is fixed at 2400 bps.*

RS-232 and USB Communication Ports

To establish communication between the UPS and a computer, connect your computer to one of the UPS communication ports using an appropriate communication cable (not supplied). See FIG. 19, 20 for the communication port locations.

When the communication cable is installed, power management software can exchange data with the UPS. The software polls the UPS for detailed information on the status of the power environment. If a power emergency occurs, the software initiates the saving of all data and an orderly shutdown of the equipment. The cable pins for the RS-232 communication port are identified in FIG. 21 and the pin functions are described in Table 9.

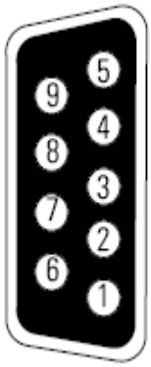

FIG.21 RS-232 Communication Port (DB-9 Connector)

Table 9. RS-232 Communication Port Pin Assignment

Pin Number	Function Definition	Direction from the UPS
1、4、6、7、8、9	No use	--
2	R×D(Transmit to external device)	Out
3	TxD(Receive from external device)	In
5	GND(Signal common)	--

Connectivity Cards

Connectivity cards allow the UPS to communicate in a variety of networking environments and with different types of devices. The UPS has one available communication bay for the following connectivity cards:

- **Web/SNMP Card** - has SNMP and HTTP capabilities as well as monitoring through a Web browser interface; connects to a twisted-pair Ethernet (10/100BaseT) network. In addition, a Environmental Monitoring Probe can be attached to obtain humidity, temperature, smoke alarm, and security information.
- **Relay Interface Card** - has isolated dry contact relay outputs for UPS status: Utility failure, Low battery, UPS alarm/OK, or On bypass.

See FIG. 19, 20 on page 36 for the location of the communication bay.

FIG.22 Optional Connectivity Cards

NOTE : Before installing the connectivity card , please remove the clip from the bay. Refer to the user’s manual of the appropriate cards.

Emergency Power-off

EPO is used to shut down the UPS from a distance. This feature can be used for

shutting down the load and the UPS by thermal relay, for instance in the event of room overtemperature. When EPO is activated, the UPS shuts down the output and all its power converters immediately. The UPS remains on to alarm the fault.

There is also a front panel EPO option for user to initial EPO function by pressing the three switch on the front panel together. When the three switches is pressed down at the same time, the EPO function will be active, UPS will shut down and the buzzer will long beep. Pressing startup switches will not turn on the UPS unless the EPO function is deactivated by pressing the three switches together and press off switches to return normal status.

WARNING

The EPO circuit is an IEC 60950 safety extra low voltage (SELV) circuit. This circuit must be separated from any hazardous voltage circuits by reinforced insulation.

CAUTION

● The EPO must not be connected to any utility connected circuits. Reinforced insulation to the utility is required. The EPO switch must have a minimum rating of 24 Vdc and 20 mA and be a dedicated latching-type switch not tied into another circuit. The EPO signal must remain active for at least 250 ms for proper operation.

● To ensure the UPS stops supplying power to the load during any mode of operation, the input power must be disconnected from the UPS when the emergency power-off function is activated.

NOTE *For Europe, the emergency switch requirements are detailed in Harmonized document HD-384-48 S1, "Electrical Installation of the Buildings, Part 4: Protection for Safety Chapter 46: Isolation and Switching."*

EPO Connections		
Wire Function	**Terminal Wire Size Rating**	**Suggested Wire Size**
EPO L1 L2	4–0.32 mm2 (12–22 AWG)	0.82 mm2 (18 AWG)

NOTE *Leave the EPO connector installed onto the EPO port of the UPS even if the EPO function is not needed.*

See FIG. 19, 20 on page 36 for EPO location. FIG. 23 shows a schematic of the EPO connector contacts.

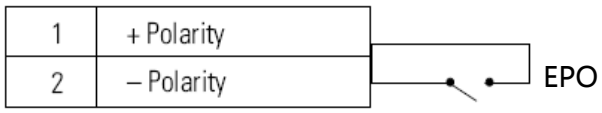

FIG.23 EPO Connections

You can set the EPO polarity. See the "EPO Input Polarity" setting in "User Settings" on page 30.

NOTE Depending on user configuration, the pins must be shorted or opened to keep the UPS running. To restart the UPS, reconnect (re-open) the EPO connector pins and turn on the UPS manually. Maximum resistance in the shorted loop is 10 ohm.

NOTE Always test the EPO function before applying your critical load to avoid accidental load loss.

Load Segments

Load segments are sets of receptacles that can be controlled by power management software or through the display, providing an orderly shutdown and startup of your equipment. For example, during a power outage, you can keep critical equipment running while you turn off other equipment. This feature allows you to save battery power.

Each UPS has two load segments:

- Load Segment 1: The power shedding battery voltage of this segment can be set by LCD.
- Load Segment 2.

See "Rear Covers" on page 48 for load segments for each UPS model.

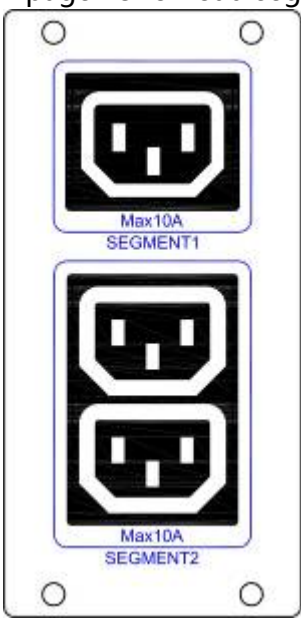

FIG.24 Load Segments

UPSilon2000 Power Management Software

Each UPS ships with UPSilon2000 Power Management Software. To begin installing

UPSilon2000 software, see the instructions accompanying the Software Suite CD.

NOTE Install UPSilon2000 power management software with the serial number attched on the cover of the CD .When running the monitor software , choose appropriate communication port. If using RS232, choose COM1/2 and Megatec protocol. If using USB, choose megatec USB.

UPSilon2000 software provides up-to-date graphics of UPS power and system data and power flow. It also gives you a complete record of critical power events, and it notifies you of important UPS or power information. If there is a power outage and the UPS battery power becomes low, UPSilon2000 software can automatically shut down your computer system to protect your data before the UPS shutdown occurs.

6 UPS Maintenance

This section explains how to:

- Care for the UPS and batteries
- Replace Extended Battery Packs(EBPs)
- Test new batteries
- Recycle used batteries or UPS

UPS and Battery Care

For the best preventive maintenance, keep the area around the UPS clean and dust-free. If the atmosphere is very dusty, clean the outside of the system with a vacuum cleaner. For full battery life, keep the UPS at an ambient temperature of 25°C (77°F).

NOTE The batteries in the UPS are rated for a 3–5 year service life. The length of service life varies, depending on the frequency of usage and ambient temperature. Batteries used beyond expected service life will often have severely reduced runtimes. Replace batteries at least every 5 years to keep units running at peak efficiency.

Storing the UPS and Batteries

If you store the UPS for a long period, recharge the battery every 6 months by connecting the UPS to utility power. The internal batteries charge to 80% capacity in less than 5 hours. However, we recommends that the batteries charge for 48 hours after long-term storage. If optional EBPs are installed, see the recharge times listed in Table 21 on page 48. Check the battery recharge date on the shipping carton label. If the date is expired and the batteries were never recharged, do not

use the UPS. Contact your service representative.

Replacing Batteries

NOTE *DO NOT DISCONNECT the batteries while the UPS is in Battery mode.*。

The EBP can be replaced when UPS is ON， but be aware that if the utility fails at that time , the load of the UPS may NOT be protected.

If you prefer to remove input power to change the batteries, see "UPS Turn on and Turn off" on page 33.

WARNING

- Servicing should be performed by qualified service personnel knowledgeable of batteries and required precautions. Keep unauthorized personnel away from batteries.
- Batteries can present a risk of electrical shock or burn from high short circuit current. Observe the following precautions: 1) Remove watches, rings, or other metal objects; 2) Use tools with insulated handles; 3) Do not lay tools or metal parts on top of batteries, 4) Wear rubber gloves and boots.
- When replacing batteries, replace with the same type and number of batteries or battery packs. Contact your service representative to order new batteries.
- Proper disposal of batteries is required. Refer to your local codes for disposal requirements.
- Never dispose of batteries in a fire. Batteries may explode when exposed to flame.

Replacing RT UPS and EBPS

1. If the battery fault, the following steps are provided for modular unit to replace the new battery pack
2. 2. Remove the front cover of the battery box.
3. Remove the connection cables between battery box and UPS. Release the screw of the baffle of the battery pack as the Fig.25 shows, then remove the baffle from the left or right.

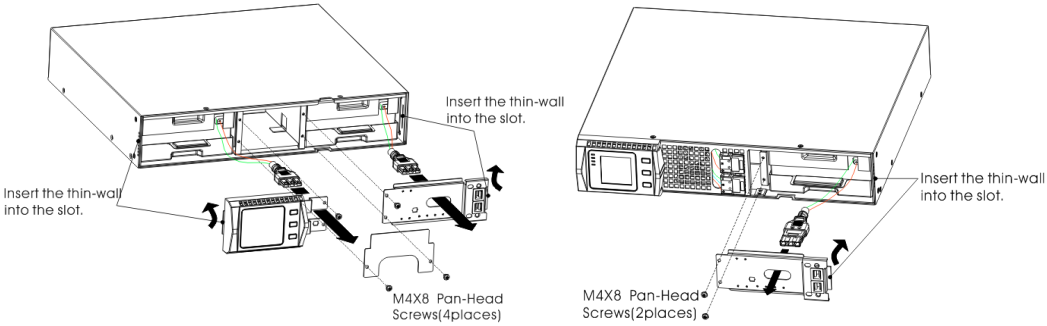

FIG.25 The Installation for baffle of battery pack

4. Grasp the handle in front of the battery pack, take out of it and hold it, then remove the battery pack as fig. 26 shown.

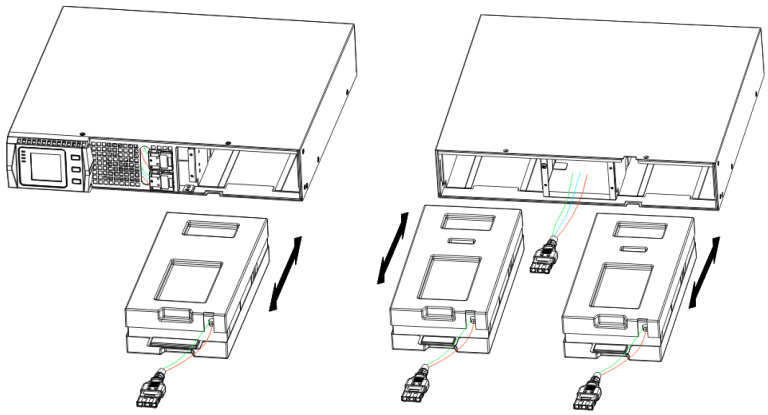

FIG.26 Remove the battery park

5. Hold the middle of the new battery pack, insert it. Once install the new battery pack, make sure it is completely inserted into the chassis as fig 27 shown.

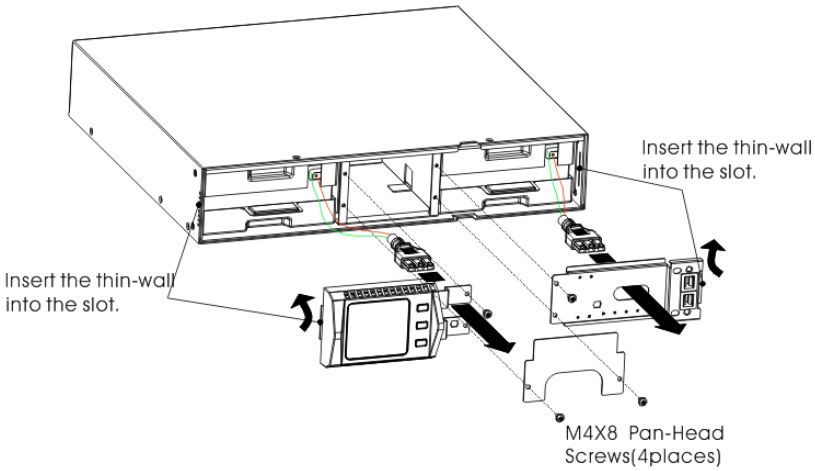

FIG.27 Installation for battery pack

Testing New Batteries

To test new batteries:

1. Plug the UPS into a power outlet for 48 hours to charge the batteries.
2. Start up the UPS by pressing the start up combination button.
3. Press the battery test combination button to activate the battery test.
   The UPS starts a battery test if the batteries are fully charged, the UPS is in Normal mode with no active alarms, and the bypass voltage is acceptable.
   During the battery test, the UPS transfers to Battery mode and discharges the batteries for 10 seconds. The LED indicators of the front cover stop cycling when the test is completed.

Recycling the Used Battery or UPS

Contact your local recycling or hazardous waste center for information on proper disposal of the used battery or UPS.

WARNING

- Do not dispose of the battery or batteries in a fire. Batteries may explode. Proper disposal of batteries is required. Refer to your local codes for disposal requirements.
- Do not open or mutilate the battery or batteries. Released electrolyte is harmful to the skin and eyes. It may be toxic.

CAUTION

t discard the UPS or the UPS batteries in the trash. This product contains sealed,lead- atteries and must be disposed properly. For more information, contact your local recycling/reuse or hazardous waste center

CAUTION

Do not discard waste electrical or electronic equipment (WEEE) in the trash. For proper disposal, contact your local recycling/reuse or hazardous waste center.

7 Specifications

Model Specifications

This section provides the following specifications:

- Communication options
- Model lists
- Weights and dimensions
- Electrical input and output
- Environmental and safety
- Battery

Table 10. Communication Options (All Models)

Communica tion Bay	available independent communication bay for connectivity cards
Compatible Connectivity Cards	SNMP card /Contact Relay Card
Communication Ports	RS232 (DB-9): 2400 bps USB

Table 11. Extended Battery Model

EBP Model	Configuration	Battery Voltage	For Power Ratings
1KVAS –EBP	RT	24Vdc	1000 VA
1.5KVAS-EBP		36Vdc	1000/1500 VA
2KVAS -EBP		48Vdc	2000 VA
3KVAS -EBP		72Vdc	2000/3000 VA

Table 12. UPS Model List (All Models)

Model	Power Level	Rear Cover Diagram
1KVAS/1KVAH- RT	1000 VA / 900W	FIG. 28
1.5KVAS/1.5KVAH -RT	1500 VA/ 1350W	FIG. 28
2KVAS/2KVAH- RT	2000 VA / 1800W	FIG. 29
3KVAS/3KVAH- RT	3000 VA / 2700W	FIG. 29

Table 13. Weights and Dimensions (All Models)

Model (Rackmount UPS)	Dimensions (W *D *H)	Weight
1KVAS/1KVAH- RT	440*430*86.5mm	15.7 kg/11.5 kg
1KVAS/1.5KVAS/1.5KVAH -RT	440*430*86.5mm	18.7kg/18.7kg/11.5 kg
2KVAS/2KVAH/3KVAH- RT	440*552*86.5mm	26.3kg/17.5kg/17.5 kg
2KVAS/3KVAS- RT	440*720*86.5mm	33.0kg /33.0kg
Model (RT EBP)	**Dimensions (W *D *H)**	**Weight**
1KVAS- RT	440*430*86.5mm	19.0 kg
1.5KVAS -RT	440*430*86.5mm	24.0 kg
2KVAS- RT	440*552*86.5mm	33.6kg
3KVAS- RT	440*720*86.5mm	46.0 kg

Table 14. Electrical Input (All Models)

Nominal Frequency	50/60 Hz auto-sensing
Frequency Range	45–55 Hz(50Hz)/55-65Hz(60Hz) before transfer to battery
Bypass Voltage Range	+5%,+10%,+15%,+25%(+25% by default),-20%,-30%,-45%(-45% by default)

Table 15. Electrical Input (All Models)

Model Default Input (Voltage/Current)	Selectable Input Voltages	Voltage Range at 100% Load

1KVAS/1KVAH	230V / 4.4A	200 , 208 , 220 , 230 , 240	160 - 290Vac
1.5KVAS/1.5KVAH	230V / 6.5A	200 , 208 , 220 , 230 , 240	160 - 290Vac
2KVAS/2KVAH	230V / 8.7A	200 , 208 , 220 , 230 , 240	160 - 290Vac
3KVAS/3KVAH	230V / 13.0A	200 , 208 , 220 , 230 , 240	160 - 290Vac

Table 16. Electrical Input Connections (All Models)

Model Input Connection		Input Cable
1KVAS/1KVAH	IEC320 C13-10A	IEC320 C14-10A
1.5KVAS/1.5KVAH	IEC320 C13-10A	IEC320 C14-10A
2KVAS/2KVAH	IEC320 C20-16A	IEC320 C19-16A
3KVAS/3KVAH	IEC320 C20-16A	IEC320 C19-16A

Table 17. Electrical Output (All Models)

	High Voltage Models
Nominal Outputs	200/208/220/230/240V
	(voltage configurable or auto-sensing)
	1000/1500/2000/3000 VA
	0.9/1.35/1.8/2.7 kW
Frequency	50 or 60 Hz, autosensing
Output Overload (Normal Mode)	108%±5%–150%±5%: Load transfers to Fault mode after 30 seconds.
	150%±5%–200%±5%: Load transfers to Fault mode after 300 ms.
	>200%±5%: Load transfers to Fault mode after 20 ms.
Output Overload (Bypass Mode)	100%±5%–130%±5%: Load transfers to Fault mode after 20 minutes.
	130%±5%–150%±5%: Load transfers to Fault mode after 2 minutes.
	150%±5%–200%±5%: Load transfers to Fault mode after 15 seconds.
	>200%±5%: Load transfers to Fault mode after 140 ms.
Output Overload (Battery Mode)	108%±5%–150%±5%: Load transfers to Fault mode after 30 seconds.
	150%±5%–200%±5%: Load transfers to Fault mode after 300 ms.
	>200%±5%: Load transfers to Fault mode after 20 ms.

Voltage Waveform	Sine wave
Harmonic Distortion	<3% THD on linear load; <5% THD on non-linear load
Transfer Time	Online mode: 0 ms (no break)
	High Efficiency mode: 10ms maximum (due to loss of utility)
Power Factor	0.9
Load Crest Factor	3 to 1

Table 18. Electrical Output Connections (**All** Models)

Model	Output Connections	Output Cables
1K- **RT**	(IEC C13-10A)*6	IEC320 C14-10A
1.5K- **RT**	(IEC C13-10A)*6	IEC320 C14-10A
2K- **RT**	(IEC C13-10A)*6	IEC320 C14-10A
3K- **RT**	(IEC C13-10A)*6 (IEC C19-16A)*1	IEC320 C14-10A IEC320 C20-10A

Table 19. Environmental and Safety (All Models)

208/230/240 Vac Models	
Surge Suppression	EN 61000-2-2
	EN 61000-4-2, Level 4
	EN 61000-4-3, Level 3
	EN 61000-4-4, Level 4 (also on signal ports)
	EN 6100-4-5, Level 4 Criteria A
EMC Certifications	CE per IEC/EN 62040-2,
	Class B
	Class B
EMC (Emissions)	IEC 62040-2:ed2:2005 / EN 62040-2:2006
Safety Conformance	IEC 62040-1-1, IEC 60950-1
Agency Markings	CE
Operating Temperature	0°C to 40°C (32°F to 104°F) in Online mode, with linear derating for altitude

	NOTE Thermal protection switches load to Bypass in case of overheating.
Storage Temperature	-20°C to 40°C (-4°F to 104°F) with batteries
	-25°C to 55°C (-13°F to 131°F) without batteries
Transit Temperature	-25°C to 55°C (-13°F to 131°F)
Relative Humidity	0–90% noncondensing
Operating Altitude	Up to 3,000 meters (9,843 ft) above sea level
Transit Altitude	Up to 10,000 meters (32,808 ft) above sea level
Audible Noise	<55 dBA at 1 meter typical
Leakage Current	<1.5 mA

Table 20.

UPS sort	MODEL NO	Remark
Standard unit	1KVAS	Internal 1.4A charger, 2/3 PCS 9AH batteries
	1.5KVAS	Internal 1.4A charger, 3 PCS 9AH batteries
	2KVAS	Internal 1.4A charger, 4 /6PCS 9AH batteries
	3KVAS	Internal 1.4A charger, 6 PCS 9AH batteries
Long backup unit	1KVAH	★internal 6/12A charger, external 24/34Vbattery
	1.5KVAH	★internal 6/12A charger, external 36V battery
	2KVAH	★internal 6/12A charger, external 48/72V battery
	3KVAH	★internal 6/12A charger, external 72/96V battery

Table 21. Battery Runtimes (in Minutes) at 100% Load (ALL Models)

Model	Internal Batteries	+ 1 EBP	+ 2 EBPs	+ 3 EBPs	+ 4 EBPs
1KVAS(24vdc)	3	15	25	40	53
1KVAS(36vdc)	5	25	45	65	85
1.5KVAS(36vdc)	3	15	25	40	53
2KVAS(48vdc)	3	15	25	40	53
2KVAS(72vdc)	5	25	45	65	85

3KVAS(72vdc)	3	17	31	52	69

NOTE Battery times are approximate and vary depending on the load configuration and battery charge.

Table 22. Battery

	Internal Batteries	EBPs
Battery Configuration	1K VA: 24Vdc (2, 12V, 9 Ah) 1/1.5 KVA: 36Vdc (3, 12V,9 Ah) 2K VA: 48Vdc (4 , 12V,9Ah) 2/3K VA: 72 Vdc (6 , 12V,9Ah)	1K -EBP: 24Vdc (2 x 2 ,12V, 9 Ah) 1.5K -EBP: 36Vdc (2 x 3 ,12V, 9 Ah) 2K -EBP: 48Vdc (2 x 4 ,12V, 9 Ah) 3K -EBP: 72 Vdc (2 x 6 ,12V, 9 Ah)
Fuses	(2) 30A/250Vdc fuses	(4) 30A/250Vdc fuses per EBP
Type	Sealed, maintenance-free, valve-regulated, lead-acid, with minimum 3-year float service life at 25°C (77°F)	
Monitoring	Advanced monitoring for earlier failure detection and warning	
Recharge Time (to 90%)	8 hours to 90%	
Battery Port	External six-pole Anderson connector on UPS for connection to EBP	

Rear Covers

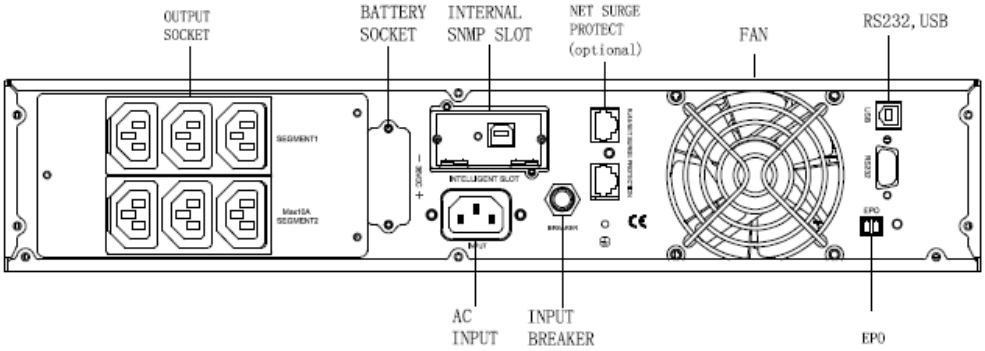

FIG.28 .

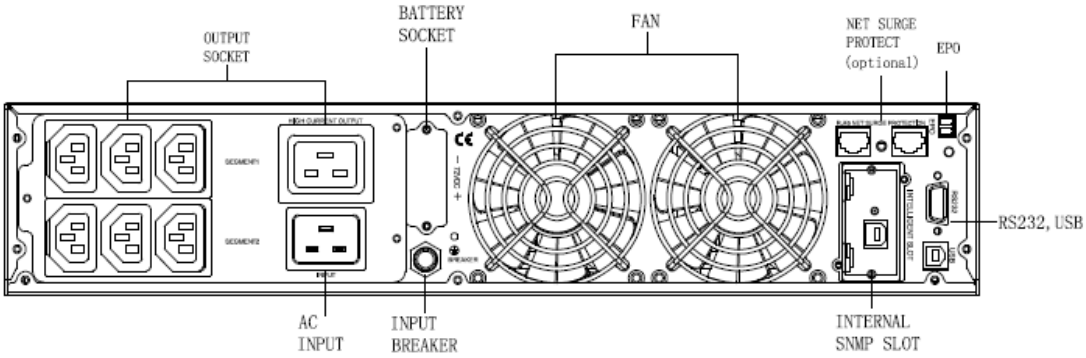

FIG.29

8 Troubleshooting

The following messages are the information that users would find on UPS when it meets some problems. Users can judge if the fault is caused by external factors and know how to deal with it by making full use of the information.

Fault indicator on, indicates that the UPS has detected some faults. Buzzer beeps, indicates that UPS need to be paid attention to, if beeps for a long time, it means that there is something wrong with the machine. If you need help, contact our service department, the following messages should be provided for analysis:

- UPS MODEL NO. and SERIAL NO.
- Date of fault happened
- Detailed description of the problem (include indicator statements on cover)

he following table describes typical alarm conditions.

Table 23.

Fault	Cause	Solution
The "INPUT" letters on LCD display section flashes	Anti-connection of mains live and neutral or mains is out of range	Re-connect the input power cable and make a correct connection
Battery capacity indicator flashes	Battery low voltage or battery disconnected	Check UPS battery, connect battery well, if battery damaged, replace it
Mains normal, but UPS has no input	UPS input breaker open circuit	Press the breaker for reset
Short back up time	Battery not fully charged	Keep UPS connecting with mains power for more than 8 hours, recharge battery
	UPS overload	Check the usage of loads, remove some redundant devices
	Battery aged	When replace battery, contact franchiser to get battery and relative assembly
UPS doesn't startup after pressing the ON key	Didn't press the combination keys of "on"	Press the two keys at the same time
	UPS has no battery connected or battery voltage low and too many loads connected	Connect UPS battery well, if battery voltage low, please turn off UPS and remove some loads, then start UPS
	Fault occurs inside UPS	Contact supplier for servicing
The icon of charger status on LCD display flashes and buzzer beeps once per second	Charger doesn't work normally or battery aged	Contact supplier for servicing

The following table describes typical faulty conditions.

Table 24. Warning and Fault Codes

⚠WARNING

Battery voltage low 1
Overload warning 2
Battery disconnect 3
Mains abnormal 4
Fan lock 5
Charger fail 6
Battery over 7
Bypass mode 8
Battery mode 9

FAULT CODES				
	Byp Mode	Line Mode	Bat Mode	BatTest Mode
Bus Fault	62	05、25	01、21	40、41
Inv Fault	61、63	04	24	42
Over Heat	33	06	08	43
OP Short	\	16	02	44
Overload	\	03	09	45
Fan Fault	36	28	38	46
Charge Fault	07	07	\	\
Bat Over	11	11	11	11