MATERIALS AND FINISHES

BODY ZINC ALLOY
PLATED NICKEL

CENTER CONTACT PHOSPHOR BRONZE
PLATED GOLD

INSULATOR POLYPROPYLENE

MOUNTING POST BRASS
PLATED TIN

SOLDER TAIL STEEL
PLATED TIN

WASHER PHOSPHOR BRONZE
PLATED NICKEL

JAM NUT BRASS
PLATED NICKEL

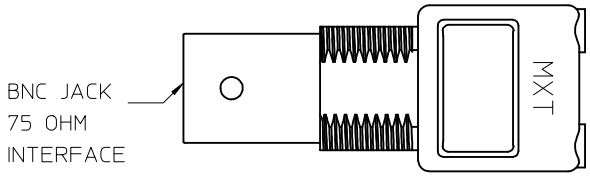

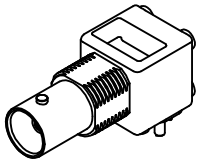

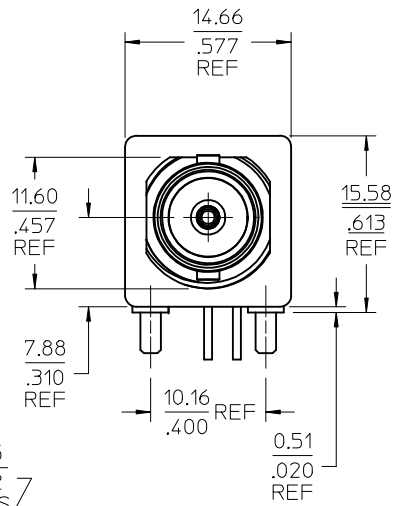

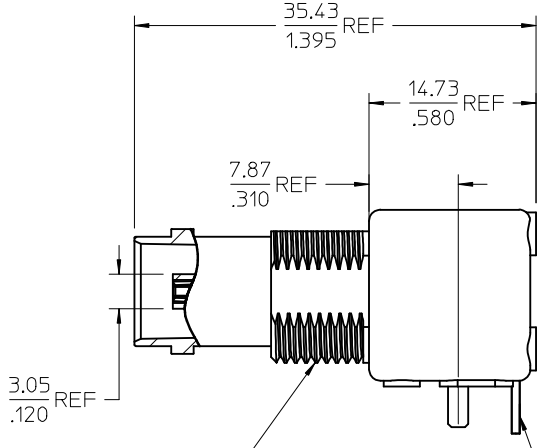

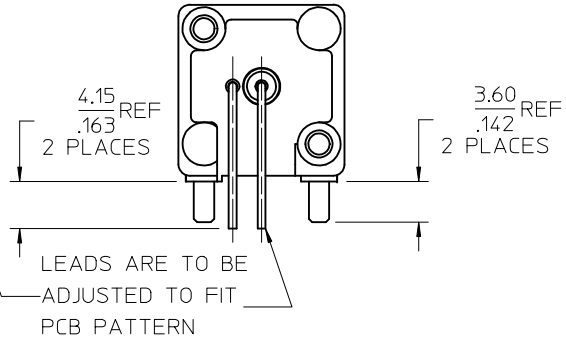

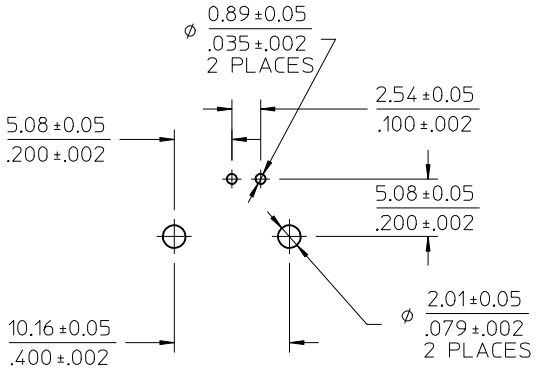

RECOMMENDED PCB HOLE

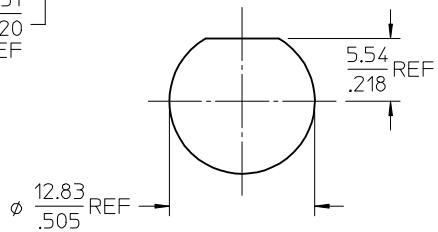

RECOMMENDED MOUNTING HOLE
PANEL THICKNESS: 5.40(.213) MAX
RECOMMENDED MOUNTING
TORQUE: 1.36 N-m(12 INCH-LBS) MAX

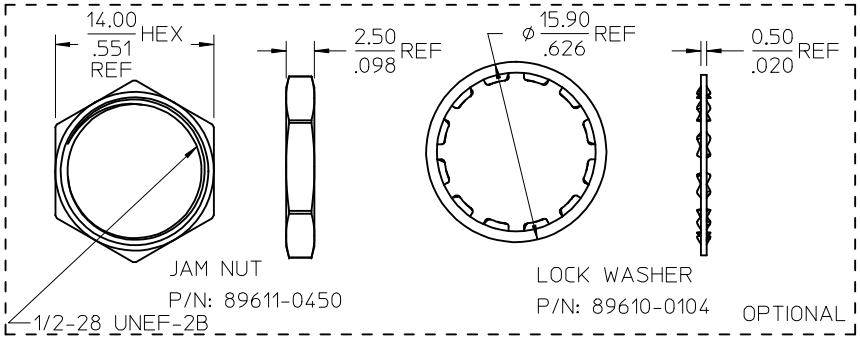

PART NO.	PACKAGING/ DESCRIPTION
73171-3021	TRAY PACK, WITHOUT JAM NUT AND LOCK WASHER
73171-3020	73100-0080, ONE PER BAG
73100-0080	TRAY PACK, WITH JAM NUT AND LOCK WASHER

SPECIFICATION	DESCRIPTION
PS-73598-0051	PRODUCT SPECIFICATION

REV	DESCRIPTION
B4	CHG: ADDED P/N FOR NUT & WASHER PER RF14-E066 EC NO: URF2014-0353 2013/12/09 DRWN:CWE102 CH'KD: APPR:MHUANG 2013/12/31

QUALITY SYMBOLS
▼=0
▽=0

GENERAL TOLERANCES (UNLESS SPECIFIED)

	mm	INCH
4 PLACES	± ---	± ---
3 PLACES	± ---	± ---
2 PLACES	± ---	± ---
1 PLACE	± ---	± ---
ANGULAR ± 2 °		

DRAFT WHERE APPLICABLE MUST REMAIN WITHIN DIMENSIONS

DIMENSION STYLE: MM/IN
SCALE:
DESIGN UNITS: METRIC
THIRD ANGLE PROJECTION

DRAWN BY: DENG DATE: 1993/02/04
CHECKED BY: DATE:
APPROVED BY: KHW DATE: 1993/02/11

TITLE: BNC JACK, R/A RECEPTACLE, 75 OHMS BNC-J/RA/PCB

MOLEX INCORPORATED

MATERIAL NO.: SEE TABLE
DOCUMENT NO.: SD-73100-0080
SHEET NO.: 1 OF 1
SIZE: C

THIS DRAWING CONTAINS INFORMATION THAT IS PROPRIETARY TO MOLEX INCORPORATED AND SHOULD NOT BE USED WITHOUT WRITTEN PERMISSION