PHILIPS

Alix Ultra Efficient
9290041409

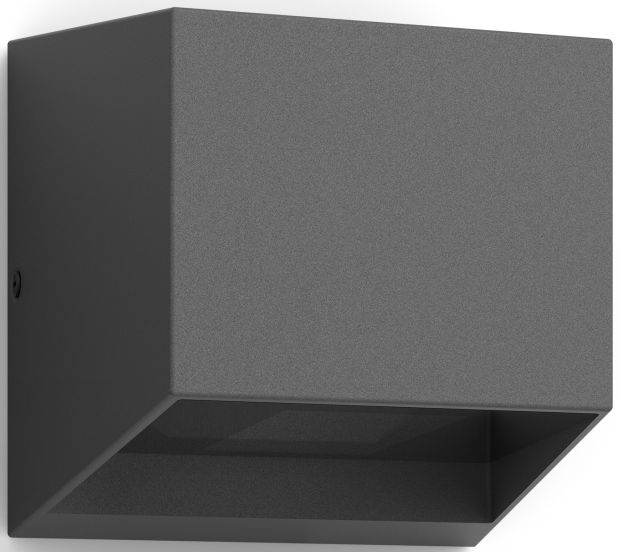

User manual
Benutzerhandbuch
Notice d’emploi
Manual de usuario
Manual do usuário
Manuale d'uso
Gebruiksaanwijzing

Incl.

A

B

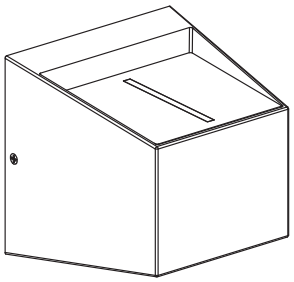



x2



x2

ST4.2*30mm

Excl.



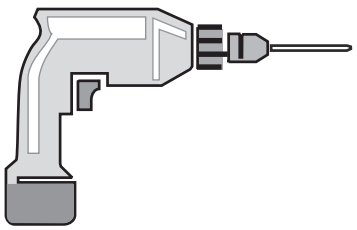

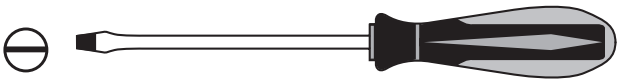

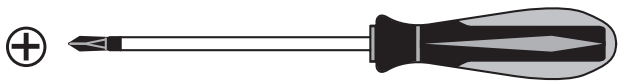

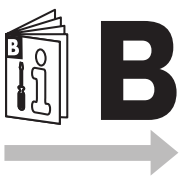

B

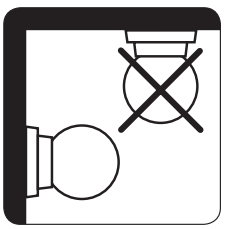



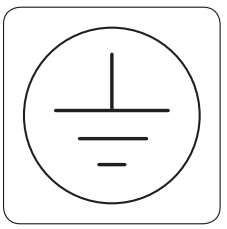

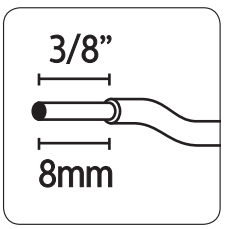

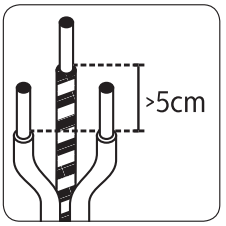

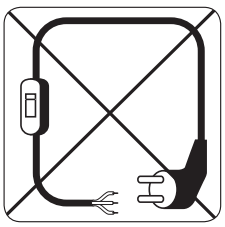

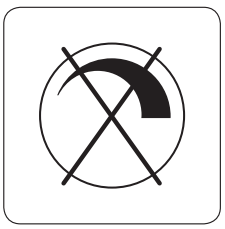

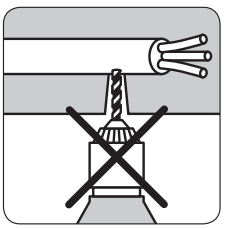

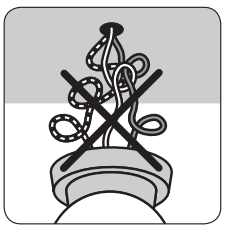



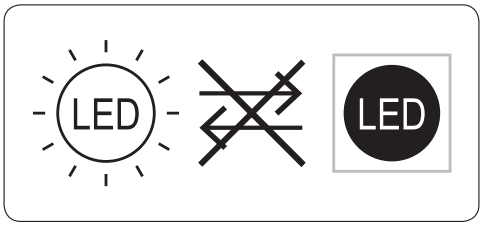

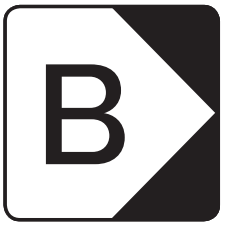

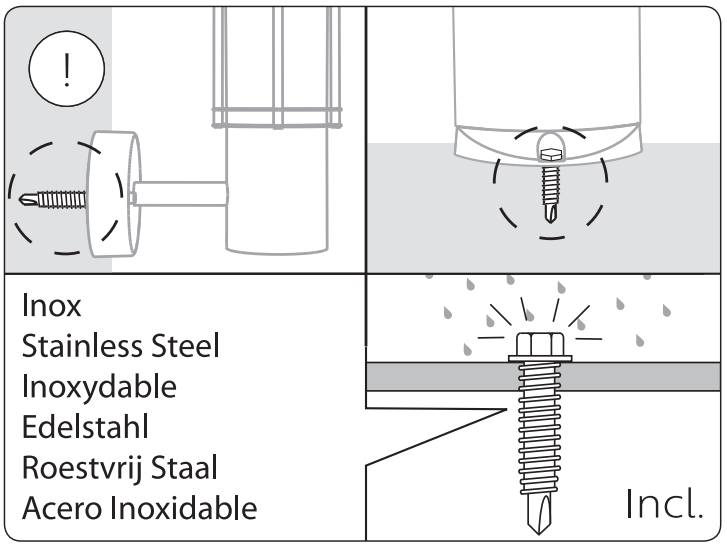
!
Inox
Stainless Steel
Inoxydable
Edelstahl
Roestvrij Staal
Acero Inoxidable
Incl.

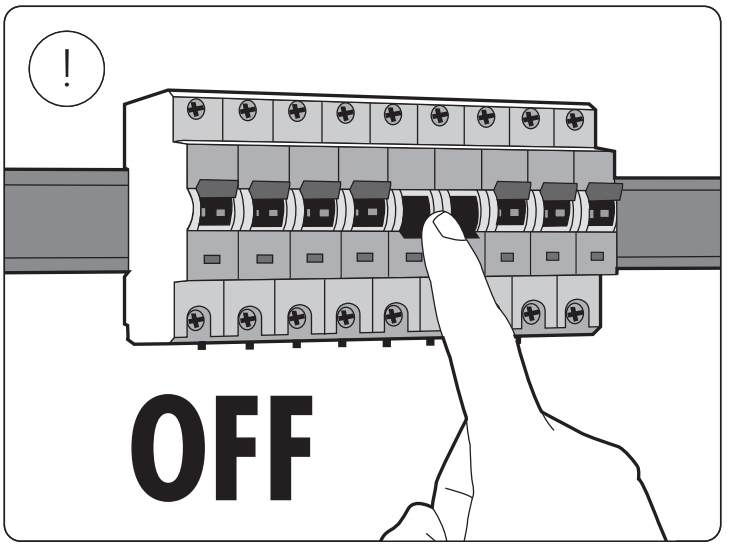
!
OFF

1

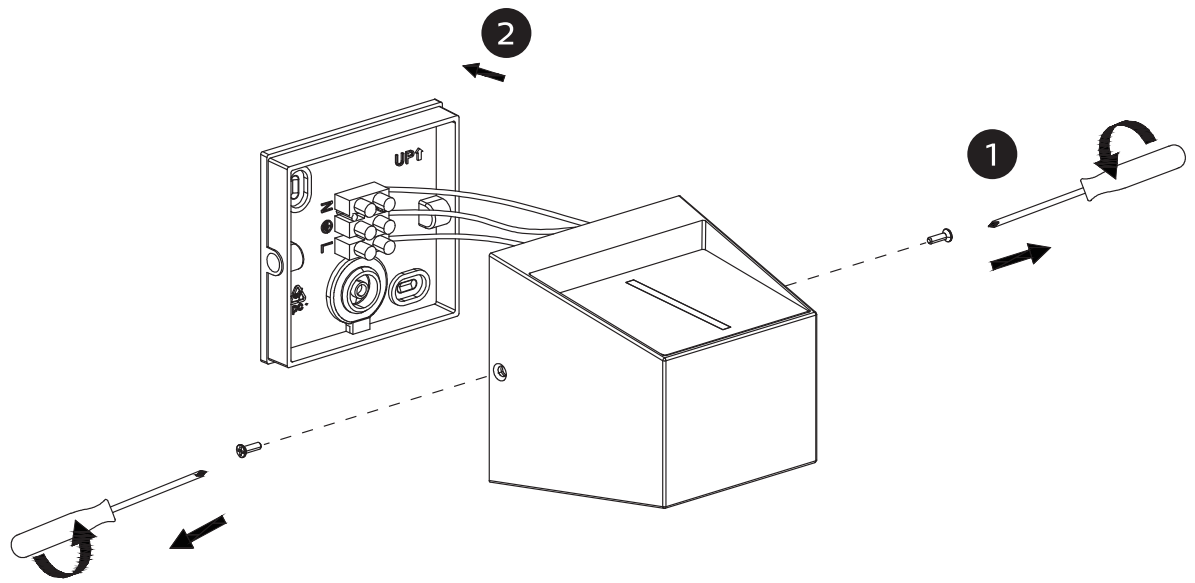
2
UP
N
L
1

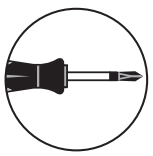

2

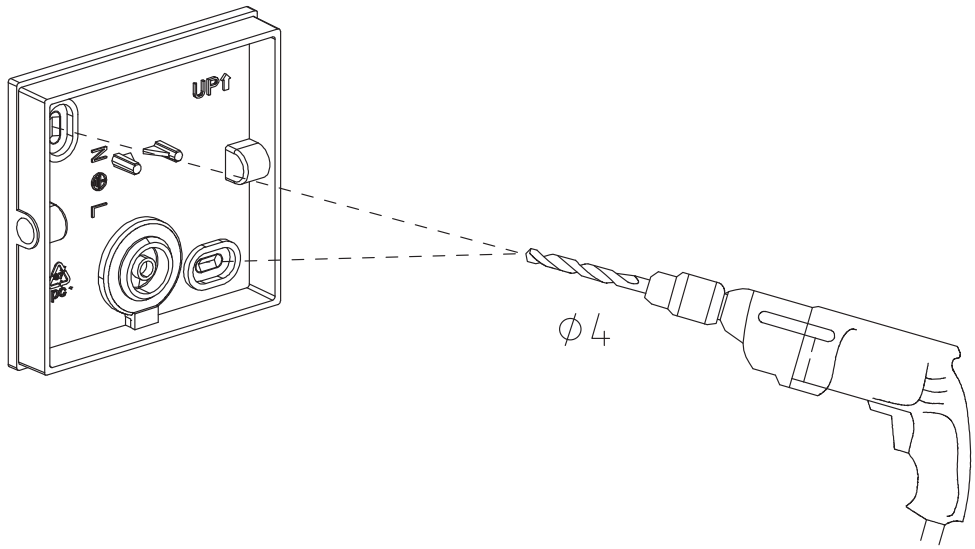

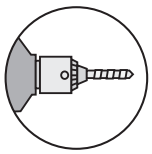

3

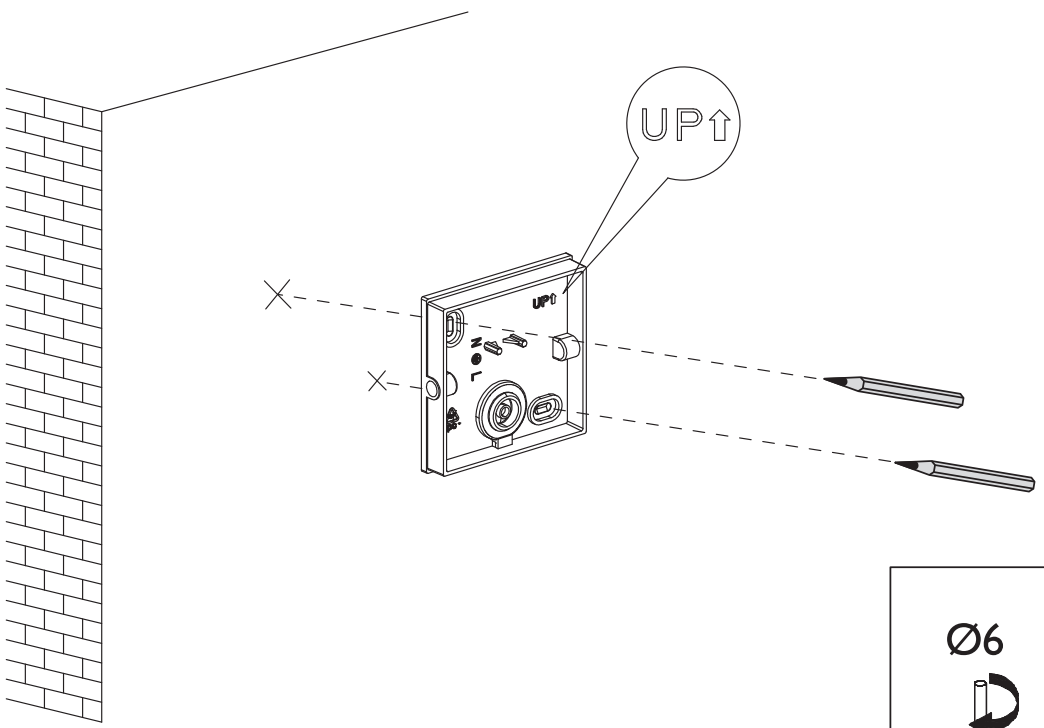

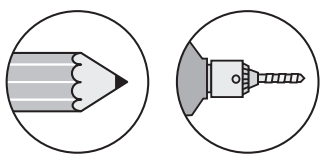

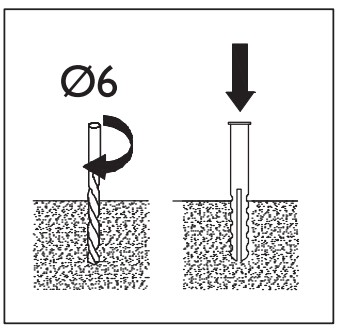

4

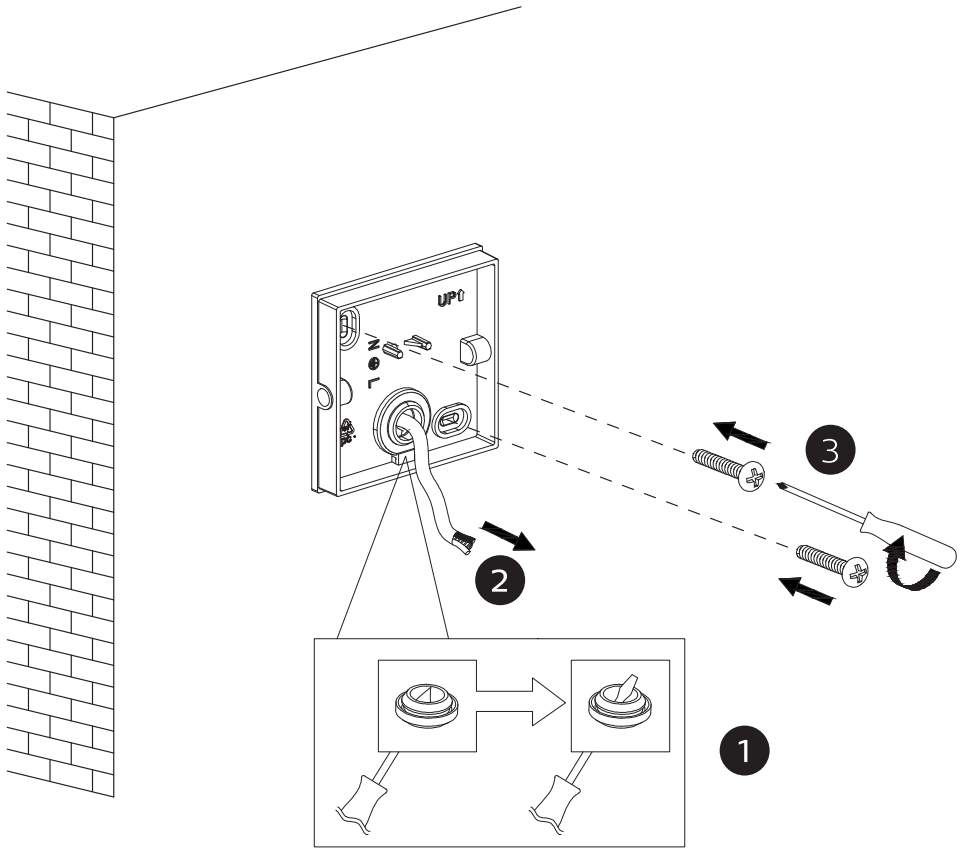

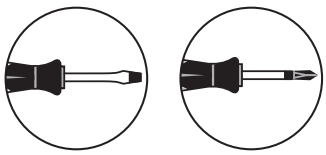

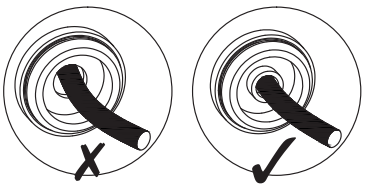

5

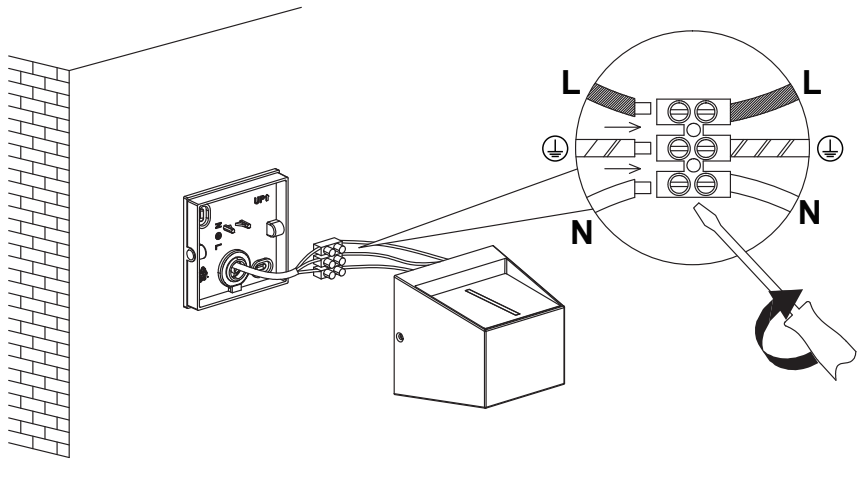

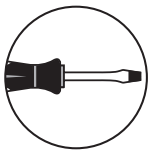

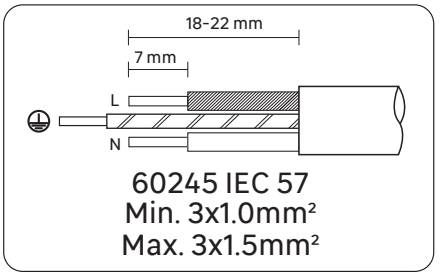

60245 IEC 57
Min. 3x1.0mm²
Max. 3x1.5mm²

6

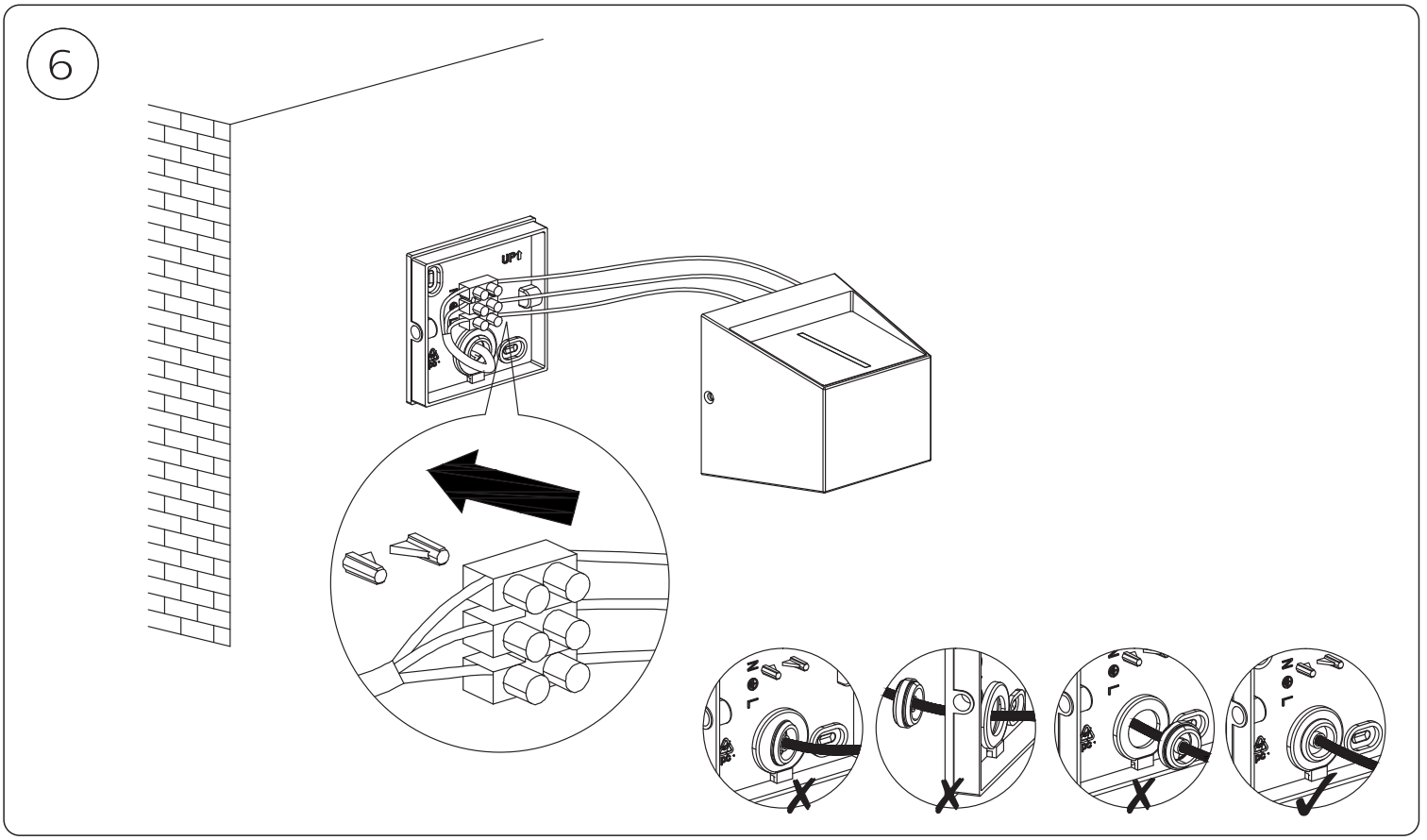

7

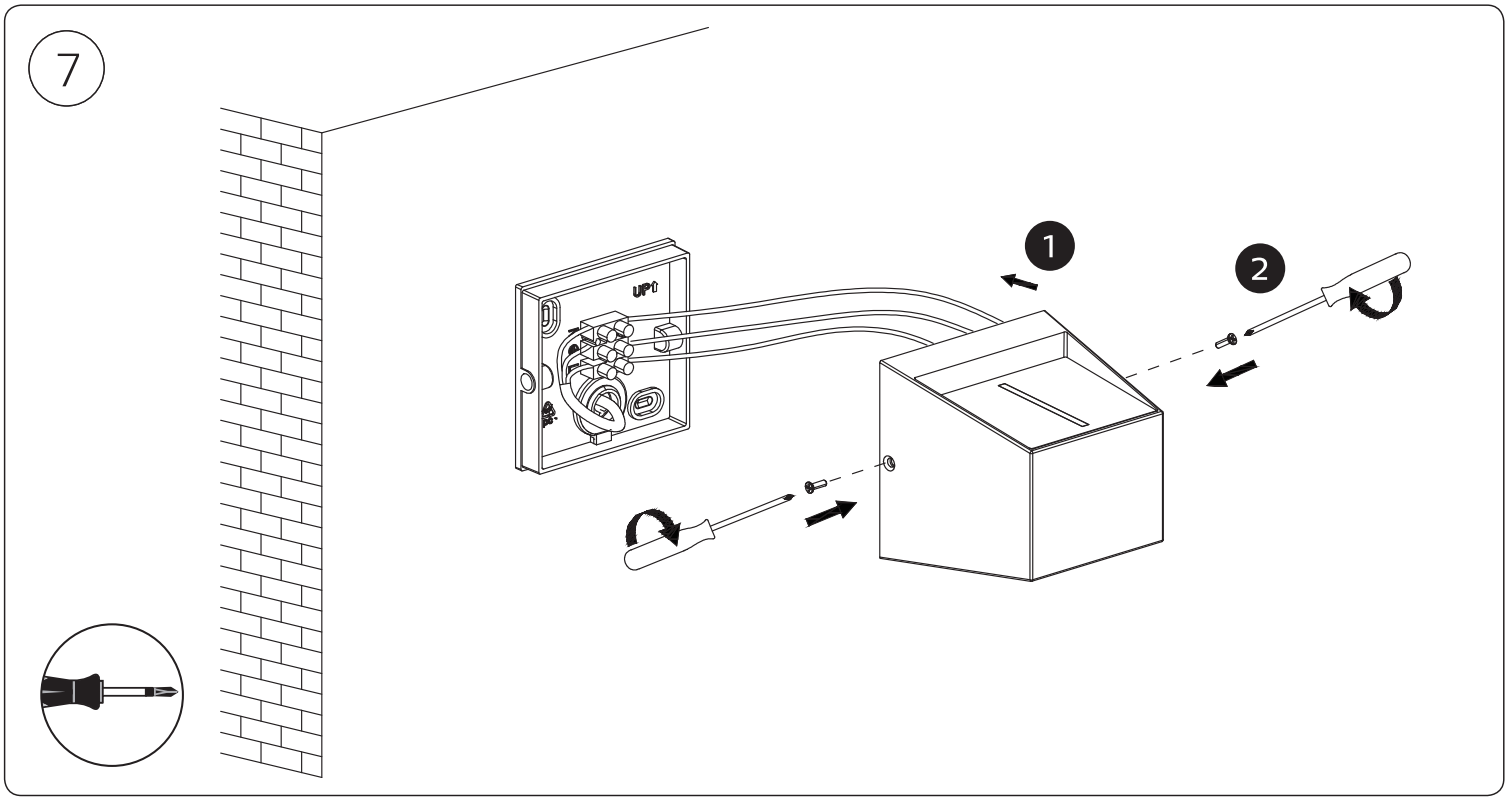

8

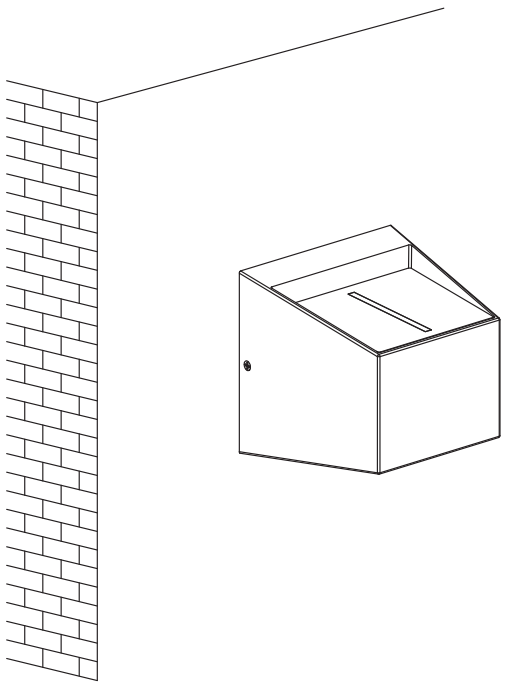

!

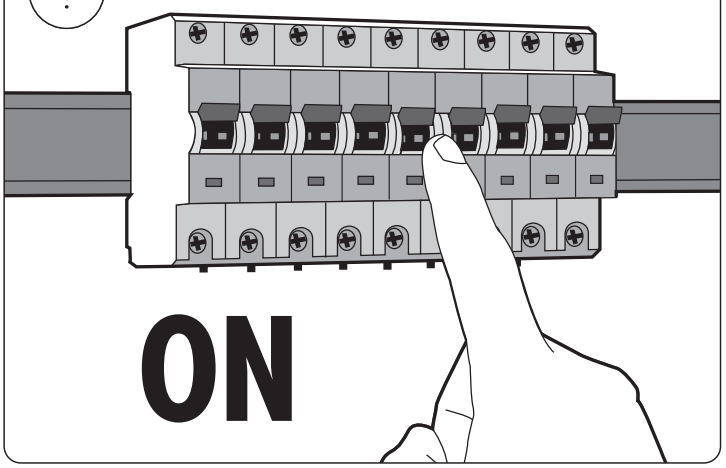



Signify Commercial UK Limited
Unit 3, Guildford Business Park,
Guildford, Surrey, GU2 8XG, UK

Signify
I.B.R.S. / C.C.R.I. Numéro 10461
5600 VB Eindhoven,
the Netherlands
✆00800-74454775

Philips and the Philips Shield Emblem are registered trademarks
of Koninklijke Philips N.V. and are used under license

3241 662 13341

www.philips.com/lighting

© 2024 Signify Holding

signify