RoHS compliant
by exemption

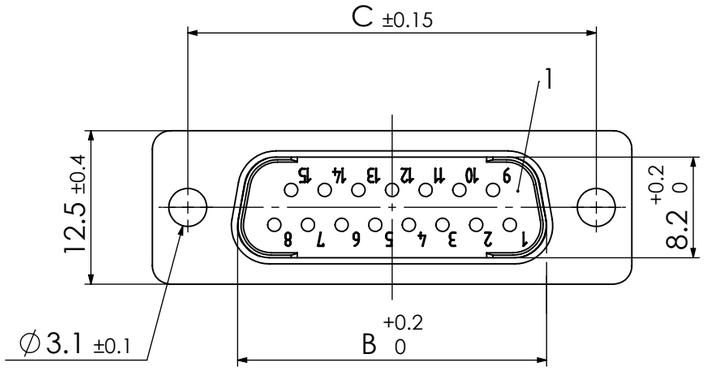

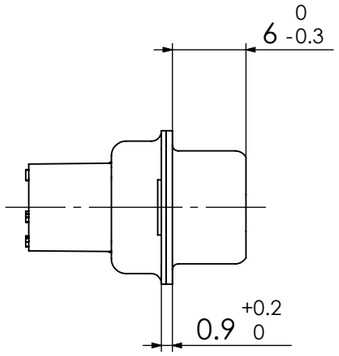

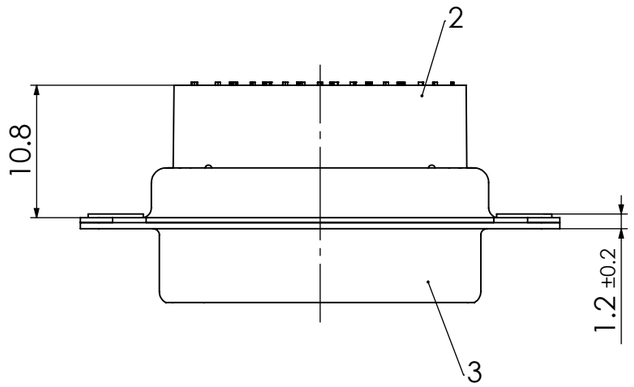

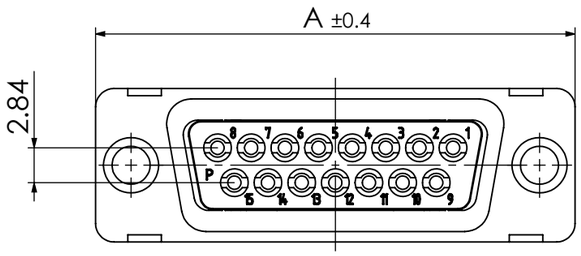

FUxx*)P7-1437

e.g. FU15P7-K120

*) xx No. of contacts 09, 15, 25 or 37

MATERIAL NUMBER	xx *)	A [mm]	B [mm]	C [mm]
1731091980	09	30.8	16.9	25
1731091982	15	39.1	25.2	33.3
1731092186	25	53	38.9	47.04
-	37	69.3	55.3	63.5

Crimp contacts FK20P (AWG 20-24/1.3µm Au) included in delivery.

3	1	Shell	Brass	1.3µm Au
2	1	Insulator rear part	PEI (-55°C to +130°C)	green
1	1	Insulator front part	PBT acc. UL94V-0	green
No.	*St.*	*Part*	*Type Description/Material*	*Surface plating/Colour/Class*

FUNCTIONAL SYMBOLS
= 0
= 0
= 0

THIS DRAWING CONTAINS INFORMATION THAT IS PROPRIETARY TO MOLEX ELECTRONIC TECHNOLOGIES, LLC AND SHOULD NOT BE USED WITHOUT WRITTEN PERMISSION

DIMENSION UNITS: mm
SCALE: 2:1
MEASUREMENTS WITHOUT TOLERANCE ACC. TO: ISO 2768-mK

REV.	CH.-NO.
4	24410
3	24130
2	23237
1	

CURRENT REVISION
DRWN: DRAWN BY msteinbrueck 31-01-2024
APPR: APPR BY mteubel 20-02-2024

INITIAL REVISION
DRWN: DRAWN BY ADenzinger 15-12-2008
APPR: APPR BY Markus.Jobst 27-01-2010

molex

FCT D-Sub Crimp Connector

PRODUCT CUSTOMER DRAWING

MATERIAL NUMBER: see table
REVISION: 4

REPLACEMENT FOR: 1731091980_Rev. A
FRIST ANGLE PROJECTION
DRAWING: A3-SIZE
DOCUMENT NUMBER: FUxxP7-1437
CUSTOMER: GENERAL MARKET
SHEET NUMBER: 1 OF 1

COMMENT:
ALL RIGHTS ARE RESERVED BY US FOR THIS DRAWING, WITHOUT OUR PRIOR CONSENT,
IT MAY NEITHER BE DUBLICATED NOR MADE AVAILABLE TO A THIRD PARTY,
AND IT ALSO MAY NOT BE IMPROPERLY USED BY TE RECEIVER, OR A THIRD PARTY.