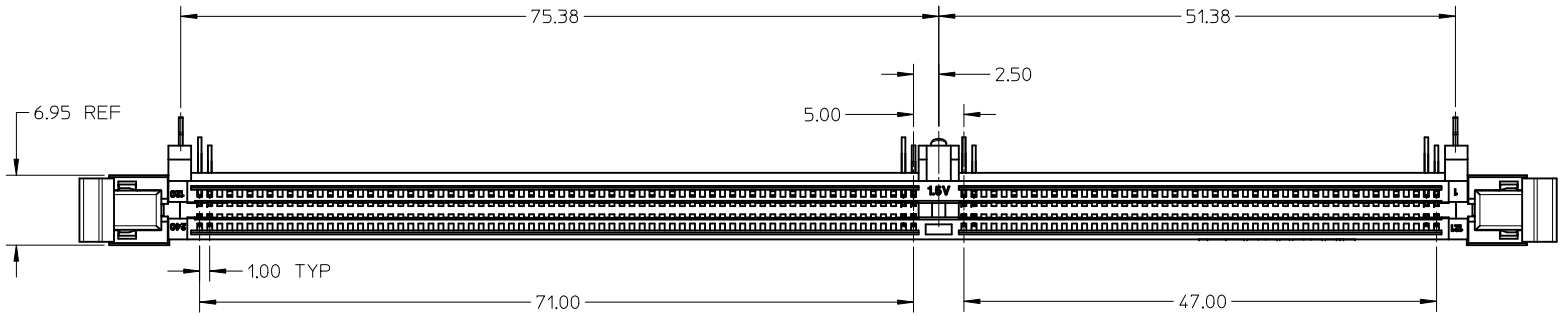

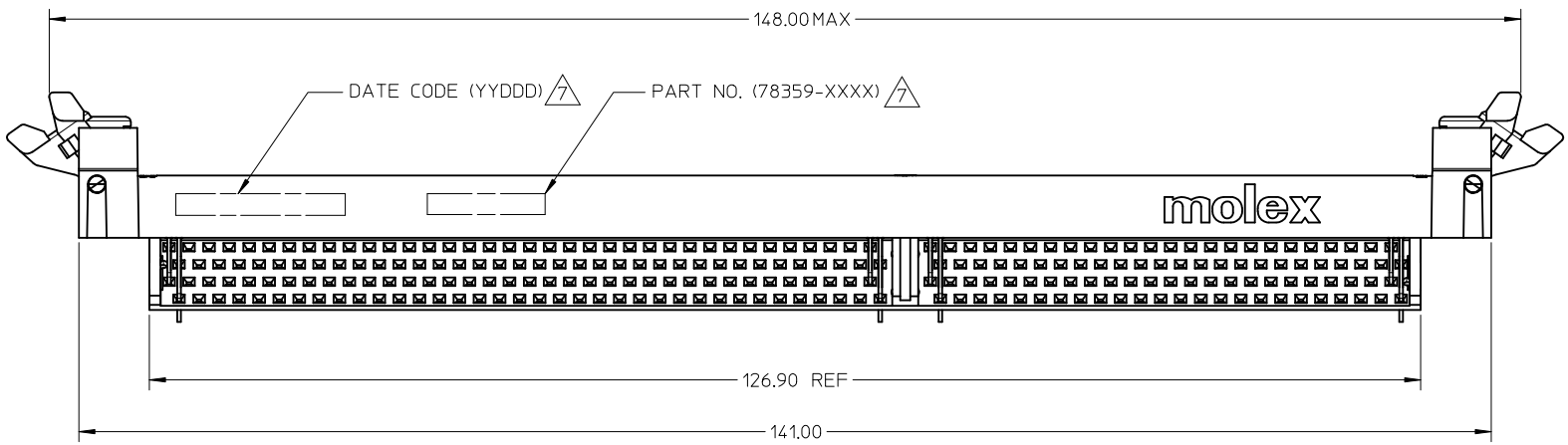

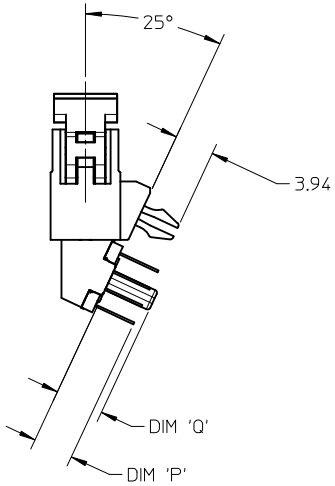

NOTES:

1. MATERIALS:
   HOUSING & BASEPLATE - LCP, GLASS-FILLED, UL94V-0, BLACK
   LATCH - NYLON, GLASS-FILLED, UL94V-0, BLACK
   TERMINALS & FORKLOCK - COPPER ALLOY
2. PLATING : CONTACT AREA - SEE TABLE IN SHEET 5
   SOLDERTAIL - SEE TABLE IN SHEET 5
3. CARD SLOT ACCEPTS 1.27±0.10MM MODULE THICKNESS (MEASURE OVER PC PAD)
4. REFER TO PRODUCT SPECIFICATION PS-78359-001 FOR PERFORMANCE SPECIFICATION
5. RECOMMENDED MODULE CARD LAYOUT SHELL BE AS PER JEDEC MO-269
6. PRODUCT SHALL BE PACKED IN TRAY
7. MOLEX LOGO , DATE CODE PART NUMBER INDICATED ON HOUSING

THIS DESIGN IS BASED ON DESIGN OBJECTIVES AND IS STRICTLY TENTATIVE. IT MAY CHANGE BASED ON RESULTS OF ADDITIONAL DESIGN REVIEWS & VERIFICATIONS.

REV	DESCRIPTION
2	ADDED CORING EC NO: S2011-0442 DRWN:CCTEH 2011/01/20 CHKD:CGTAN 2011/01/26 APPR:SHLENI 2011/01/26

QUALITY SYMBOLS: E/A=0, E/C=0, E/P=0

GENERAL TOLERANCES (UNLESS SPECIFIED)	mm	INCH
4 PLACES	± ---	± ---
3 PLACES	± ---	± ---
2 PLACES	± 0.25	± ---
1 PLACE	± ---	± ---
ANGULAR ± 3 °		

DRAFT WHERE APPLICABLE MUST REMAIN WITHIN DIMENSIONS

DIMENSION STYLE: MM ONLY	SCALE: NTS	DESIGN UNITS: METRIC	THIRD ANGLE PROJECTION
DRAWN BY: CCTEH	DATE: 2007/11/27	TITLE: DDR3 DIMM, 1.00MM PITCH 240 CKTS, 25 DEG T/H, VLP	
CHECKED BY: CGTAN	DATE: 2008/04/22		
APPROVED BY: SHLENI	DATE: 2008/04/22	MOLEX INCORPORATED	
MATERIAL NO.: SEE TABLE		DOCUMENT NO.: SD-78359-001	SHEET NO.: 1 OF 5
SIZE: A3			

THIS DRAWING CONTAINS INFORMATION THAT IS PROPRIETARY TO MOLEX INCORPORATED AND SHOULD NOT BE USED WITHOUT WRITTEN PERMISSION

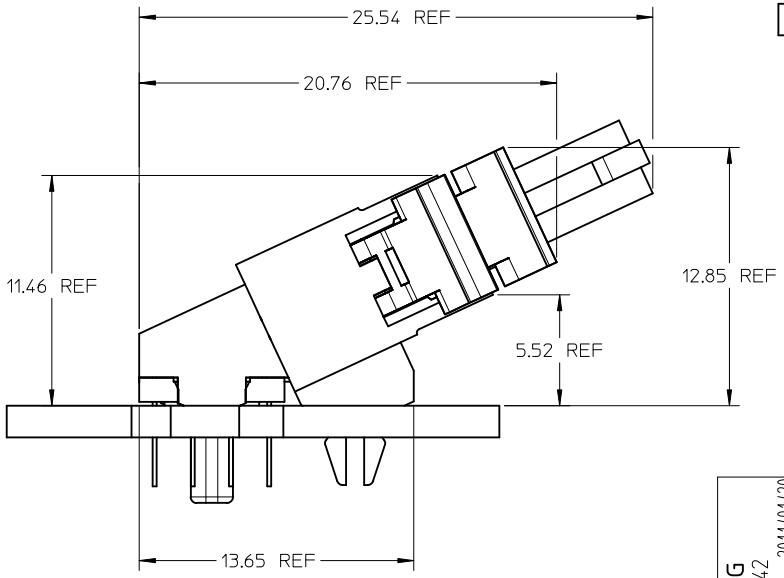

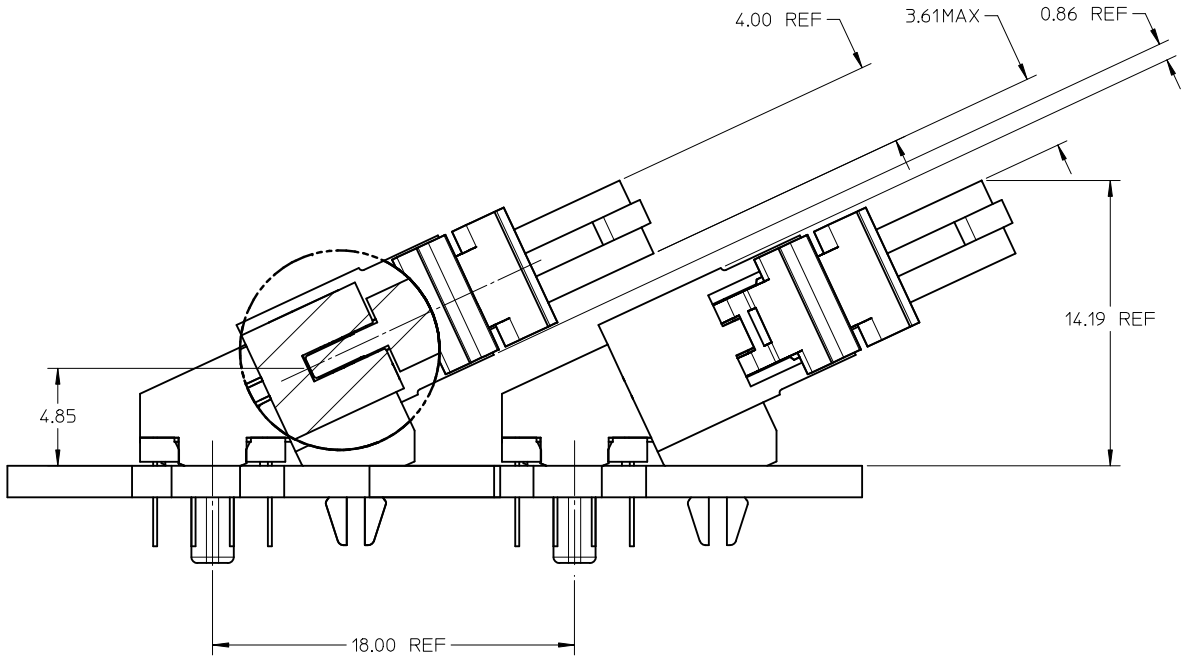

MINIMUM RECOMMENDED ROW TO ROW SPACING WHEN USING 4.00MM THICK MODULE (TYPICAL TSOP PACKAGING)

REV	DESCRIPTION	
2	ADDED CORING	
	EC NO: S2011-0442	
	DRWN:CCTEH	2011/01/20
	CH'KD:CGTAN	2011/01/26
	APPR:SHLENI	2011/01/26

QUALITY SYMBOLS

F/A=0

F/C=0

F/P=0

GENERAL TOLERANCES (UNLESS SPECIFIED)

	mm	INCH
4 PLACES	± ---	± ---
3 PLACES	± ---	± ---
2 PLACES	± 0.25	± ---
1 PLACE	± ---	± ---

ANGULAR ± 3 °

DRAFT WHERE APPLICABLE MUST REMAIN WITHIN DIMENSIONS

DIMENSION STYLE: MM ONLY	SCALE: NTS	DESIGN UNITS: METRIC	THIRD ANGLE PROJECTION
DRAWN BY: CCTEH	DATE: 2007/11/27	TITLE: DDR3 DIMM, 1.00MM PITCH 240 CKTS, 25 DEG T/H, VLP	
CHECKED BY: CGTAN	DATE: 2008/04/22		
APPROVED BY: SHLENI	DATE: 2008/04/22	MOLEX INCORPORATED	
MATERIAL NO.: SEE TABLE		DOCUMENT NO.: SD-78359-001	SHEET NO.: 2 OF 5
SIZE: A3			

THIS DRAWING CONTAINS INFORMATION THAT IS PROPRIETARY TO MOLEX INCORPORATED AND SHOULD NOT BE USED WITHOUT WRITTEN PERMISSION

MODULE CARD
DDR3 DUAL INLINE MEMORY MODULE FAMILY 1.00 CONTACT CENTERS

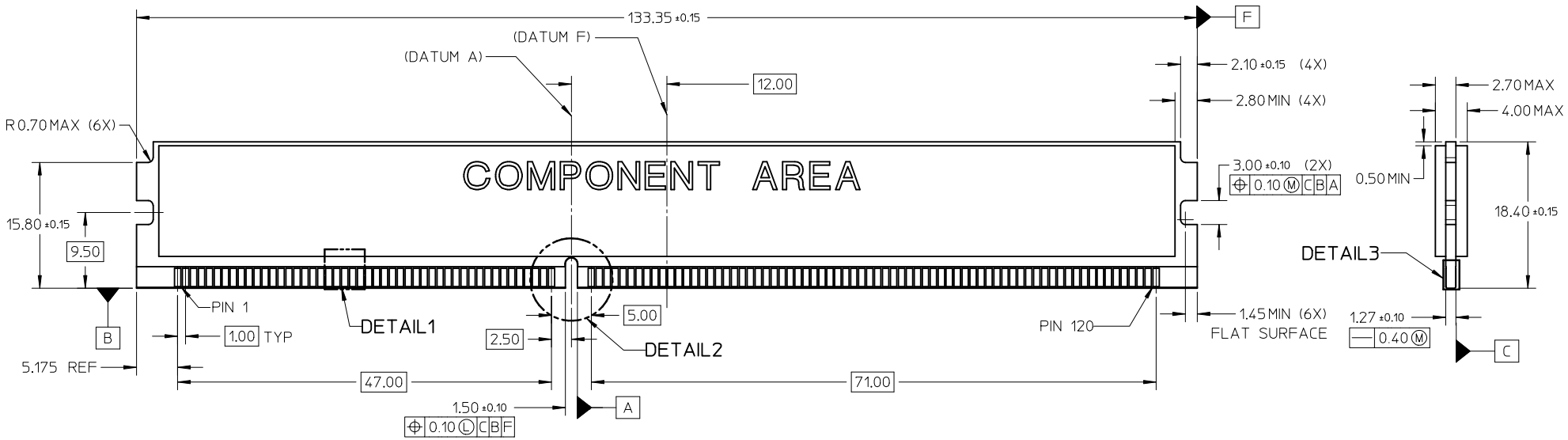

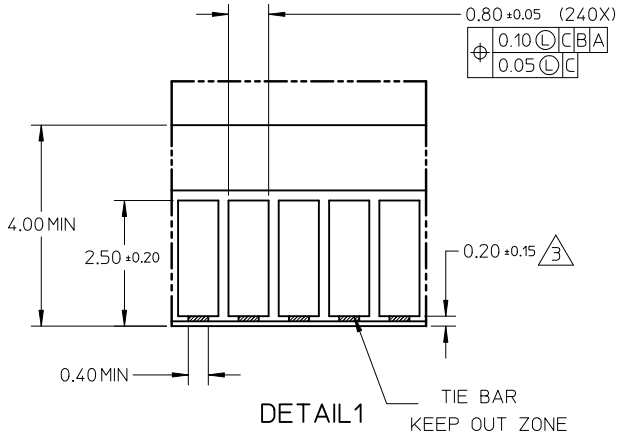

DETAIL1

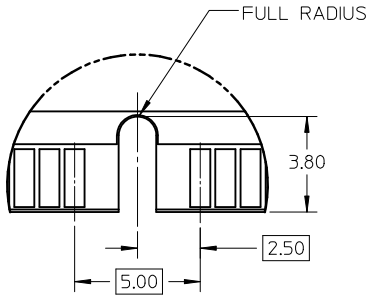

DETAIL2

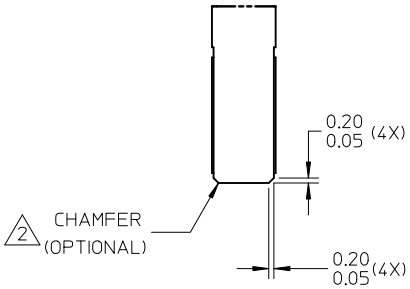

DETAIL3

NOTES:
1. RECOMMENDED PLATING FOR CONTACT PADS:
PREFERRED: 0.76 µM GOLD PLATING MIN
OVER 2.00 µM NICKEL
ALTERNATIVE: 0.05-0.75 µM GOLD PLATING
OVER 2.00 µM NICKEL MUST
USE AN ELECTRONIC CONTACT GRADE
CORROSIVE BARRIER LUBRICANT
2. CHAMFER IS OPTIONAL AND IS NOT TO HIT THE GOLD PADS
3. LEADING EDGE OF GOLD PADS SPECIFIED BY KEEP OUT ZONE
SHALL BE FREE OF BURRS AND EXTERNAL TIE BARS

REV	DESCRIPTION	
2	ADDED CORING	
	EC NO: S2011-0442	
	DRWN:CCTEH	2011/01/20
	CHKD:CGTAN	2011/01/26
	APPR:SHLENI	2011/01/26

QUALITY SYMBOLS
F_A=0
F_C=0
F_B=0

GENERAL TOLERANCES (UNLESS SPECIFIED)

	mm	INCH
4 PLACES	± ---	± ---
3 PLACES	± ---	± ---
2 PLACES	± 0.25	± ---
1 PLACE	± ---	± ---
ANGULAR ± 3 °		

DRAFT WHERE APPLICABLE MUST REMAIN WITHIN DIMENSIONS

DIMENSION STYLE: MM ONLY
SCALE: NTS
DESIGN UNITS: METRIC
THIRD ANGLE PROJECTION

DRAWN BY	CCTEH	DATE 2007/11/27
CHECKED BY	CGTAN	DATE 2008/04/22
APPROVED BY	SHLENI	DATE 2008/04/22

TITLE: DDR3 DIMM, 1.00MM PITCH 240 CKTS, 25 DEG T/H, VLP

MOLEX INCORPORATED

MATERIAL NO.: SEE TABLE
DOCUMENT NO.: SD-78359-001
SHEET NO.: 3 OF 5
SIZE: A3

THIS DRAWING CONTAINS INFORMATION THAT IS PROPRIETARY TO MOLEX INCORPORATED AND SHOULD NOT BE USED WITHOUT WRITTEN PERMISSION

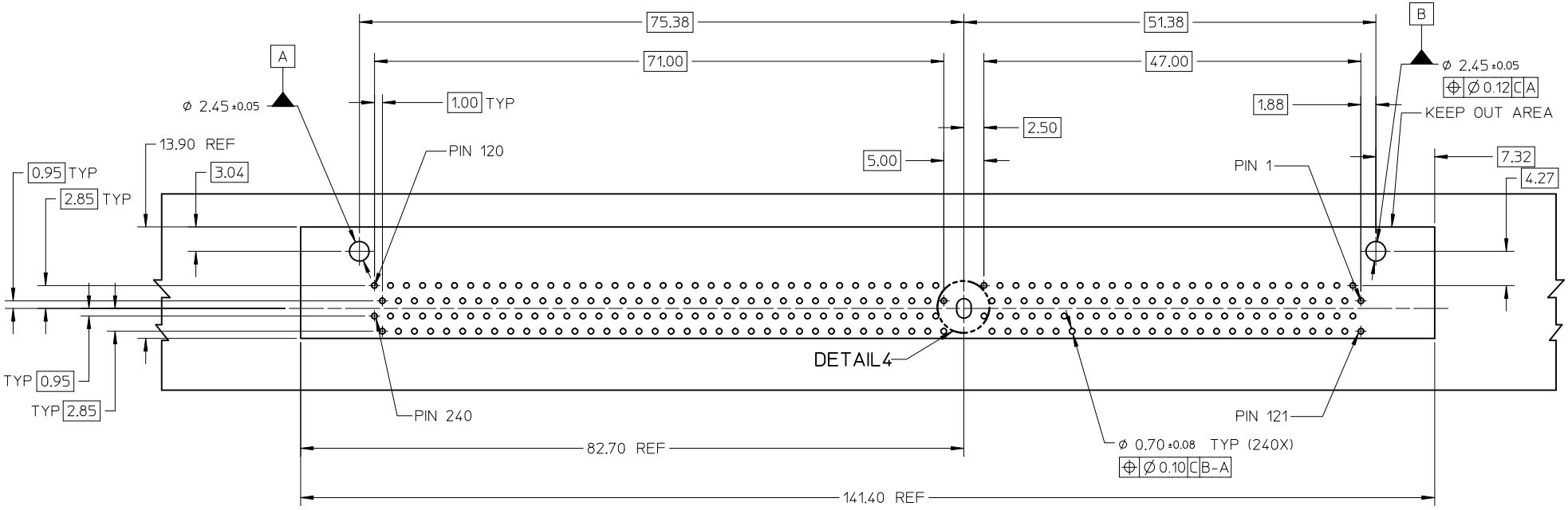

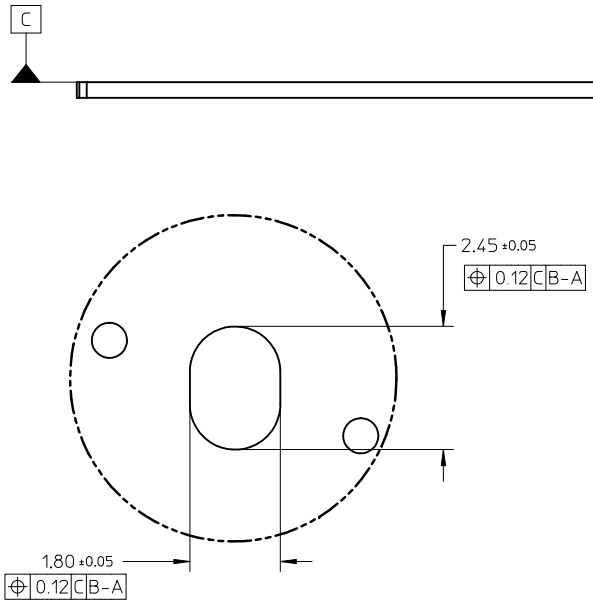

ADDED CORING	EC NO: S2011-0442	DRWN:CCTEH	2011/01/20
		CH'KD:CGTAN	2011/01/26
		APPR:SHLENI	2011/01/26
REV 2	DESCRIPTION		

QUALITY SYMBOLS

F_A=0

F_C=0

F_P=0

GENERAL TOLERANCES (UNLESS SPECIFIED)

	mm	INCH
4 PLACES	± ---	± ---
3 PLACES	± ---	± ---
2 PLACES	± 0.25	± ---
1 PLACE	± ---	± ---
ANGULAR ± 3 °		

DRAFT WHERE APPLICABLE MUST REMAIN WITHIN DIMENSIONS

DIMENSION STYLE: MM ONLY

SCALE: NTS

DESIGN UNITS: METRIC

THIRD ANGLE PROJECTION

DRAWN BY	CCTEH	DATE 2007/11/27
CHECKED BY	CGTAN	DATE 2008/04/22
APPROVED BY	SHLENI	DATE 2008/04/22

TITLE: DDR3 DIMM, 1.00MM PITCH 240 CKTS, 25 DEG T/H, VLP

molex MOLEX INCORPORATED

MATERIAL NO.: SEE TABLE

DOCUMENT NO.: SD-78359-001

SHEET NO.: 4 OF 5

SIZE: A3

THIS DRAWING CONTAINS INFORMATION THAT IS PROPRIETARY TO MOLEX INCORPORATED AND SHOULD NOT BE USED WITHOUT WRITTEN PERMISSION

PART NO.	VOLTAGE KEY	DIM 'P'	DIM 'Q'	RECOMMENDED PCB THICKNESS	PLATING OPTION
78359-0001	CENTER (1.5V)	2.79	3.18	1.57	0.76µM / 30 µInch MIN GOLD ON CONTACT 2.54µM / 100 µInch MIN PURE TIN ON SOLDERTAILS 1.27µM / 50 µInch MIN NICKEL UNDERPLATE
78359-0011		3.18	4.83	2.36	
78359-0111		4.00		2.59	

REV	DESCRIPTION	
2	ADDED CORING EC NO: S2011-0442	2011/01/20 DRWN:CCTEH 2011/01/26 CH'KD:CGTAN 2011/01/26 APPR:SHLENI

QUALITY SYMBOLS

FA=0

FC=0

FP=0

GENERAL TOLERANCES (UNLESS SPECIFIED)

	mm	INCH
4 PLACES	± ---	± ---
3 PLACES	± ---	± ---
2 PLACES	± 0.25	± ---
1 PLACE	± ---	± ---
ANGULAR ± 3 °		

DRAFT WHERE APPLICABLE MUST REMAIN WITHIN DIMENSIONS

DIMENSION STYLE: MM ONLY

SCALE: NTS

DESIGN UNITS: METRIC

THIRD ANGLE PROJECTION

DRAWN BY	CCTEH	DATE 2007/11/27
CHECKED BY	CGTAN	DATE 2008/04/22
APPROVED BY	SHLENI	DATE 2008/04/22

TITLE: DDR3 DIMM, 1.00MM PITCH 240 CKTS, 25 DEG T/H, VLP

molex MOLEX INCORPORATED

MATERIAL NO.: SEE TABLE

DOCUMENT NO.: SD-78359-001

SHEET NO.: 5 OF 5

SIZE: A3

THIS DRAWING CONTAINS INFORMATION THAT IS PROPRIETARY TO MOLEX INCORPORATED AND SHOULD NOT BE USED WITHOUT WRITTEN PERMISSION