106059

PLUG ASSY P/N	CABLE TYPE	ØD (µ)	ØX (µ)
1060597300	MULTIMODE	127 +3/-0	3
1060597700	SINGLE MODE	126 +1/-0	1

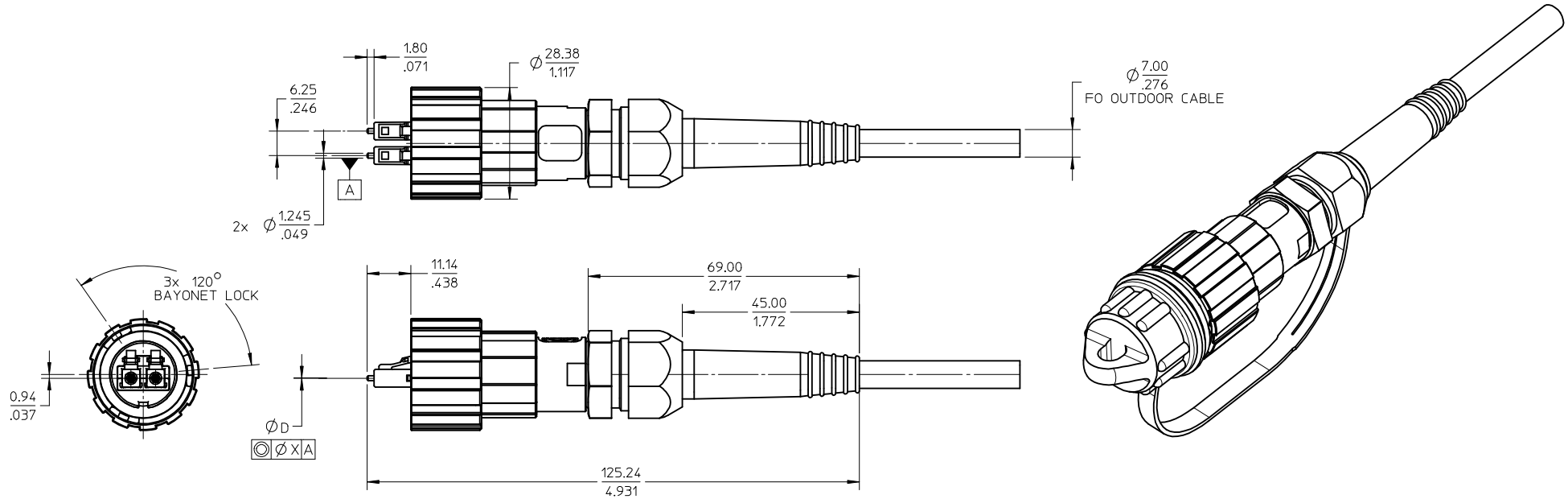

NOTES:

1. ALL DIMENSIONS SHOWN ARE FOR REFERENCE ONLY.

2. DUST CAP AND TETHER ARE SHOWN IN THE ISOMETRIC VIEW ONLY.

ENTER DESCRIPTION
EC NO: MF2009-0294
DRWN:KPEVZNER 2008/12/16
CH'KD: 2008/12/16
APPR: IGUMIN 2008/12/17
DESCRIPTION
B
REV

QUALITY SYMBOLS
▼=0
▽=0

GENERAL TOLERANCES (UNLESS SPECIFIED)

	mm	INCH
4 PLACES	± ---	± ---
3 PLACES	± ---	± ---
2 PLACES	± ---	± ---
1 PLACE	± ---	± ---
ANGULAR ±---°		

DRAFT WHERE APPLICABLE MUST REMAIN WITHIN DIMENSIONS

DIMENSION STYLE: MM/IN
SCALE: 1:1
DESIGN UNITS: METRIC
THIRD ANGLE PROJECTION

DRAWN BY: B.ANDREI DATE: 11/02/2006
CHECKED BY: S.MIGO DATE: 12/4/2006
APPROVED BY: DATE:

TITLE: PLUG ASSEMBLY METAL BODY INDUSTRIAL LC NO LOGO

molex MOLEX INCORPORATED

MATERIAL NO.: SEE TABLE
DOCUMENT NO.: SD-106059-7300
SHEET NO.: 1 OF 1
SIZE: B

THIS DRAWING CONTAINS INFORMATION THAT IS PROPRIETARY TO MOLEX INCORPORATED AND SHOULD NOT BE USED WITHOUT WRITTEN PERMISSION