Order No.	Shell Size / for No. of Contacts	A ±0.3	B ±0.1	C ±0.3	E ±0.3	øF1	øF2 min - max	G ±0.3	J ±0.3	L ±0.3
FMBR1	1/9	13.8	25	31.2	14.5	12	3.5 - 9.5	37.7	12.1	19.4
FMBR2	2/15	22	33.3	39.5	14.5	12	3.5 - 9.5	46	12.1	27.9
FMBR3	3/25	28	47	53.2	14.5	12	3.5 - 9.5	60.2	12.1	41.4
FMBR4	4/37	45	63.5	70	14.5	12	3.5 - 9.5	76.5	12.1	57.8
FMBR5	5/50	42	61.1	67.8	17.5	12	3.5 - 9.5	74	15.1	55.5

øF1 = Cable diameter without strain relief
øF2 = Cable diameter with strain relief

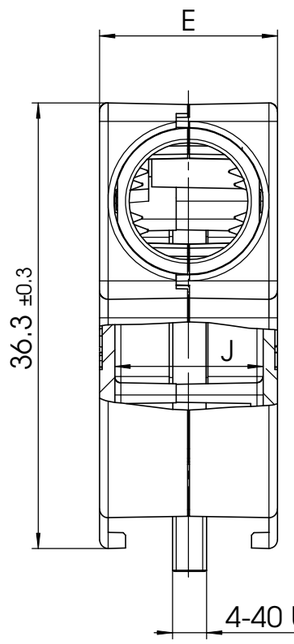

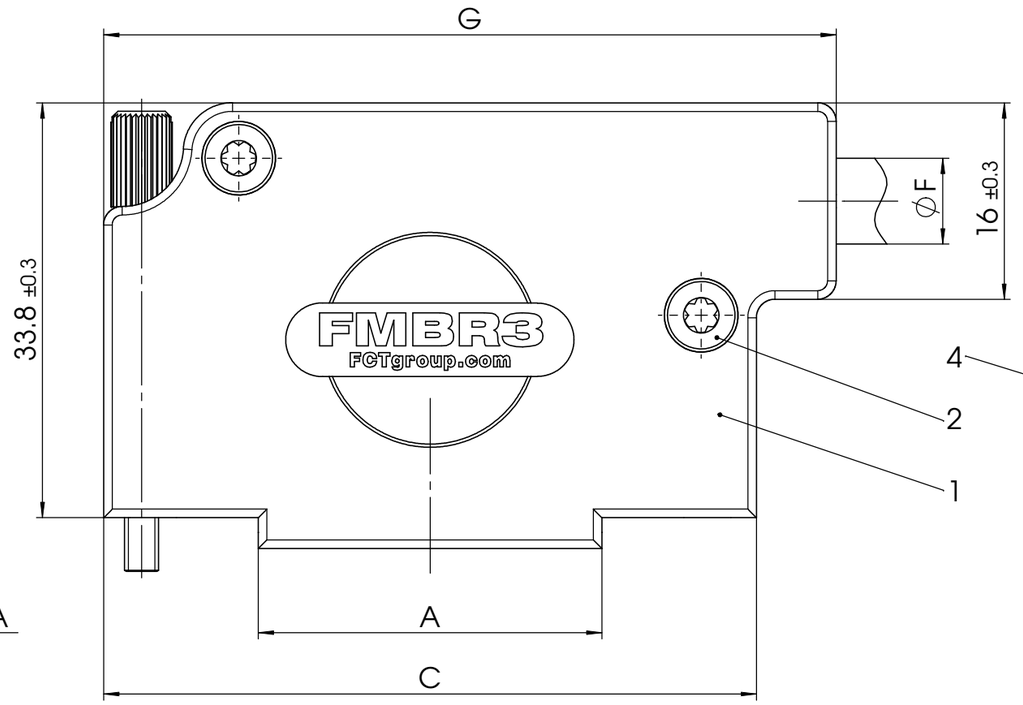

view of the hoods without lid

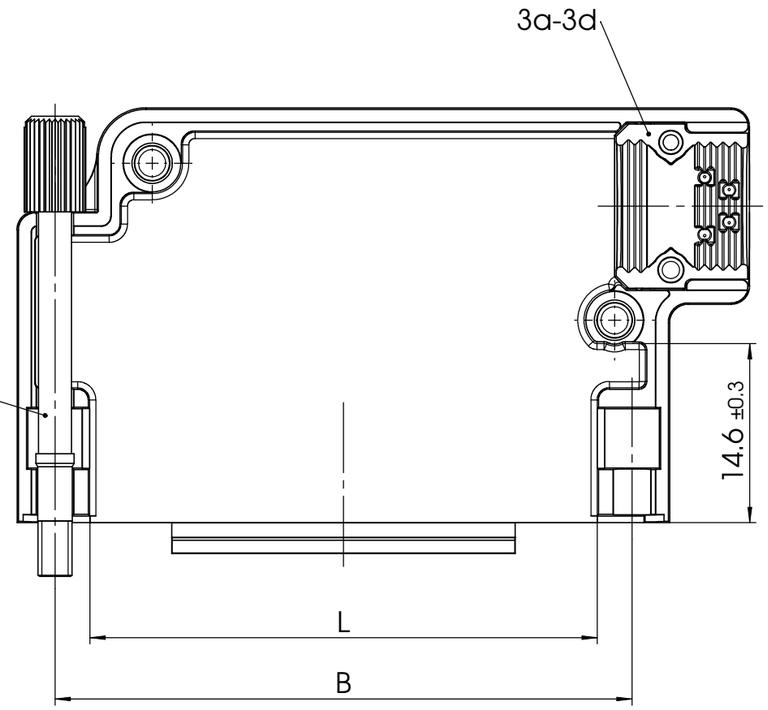

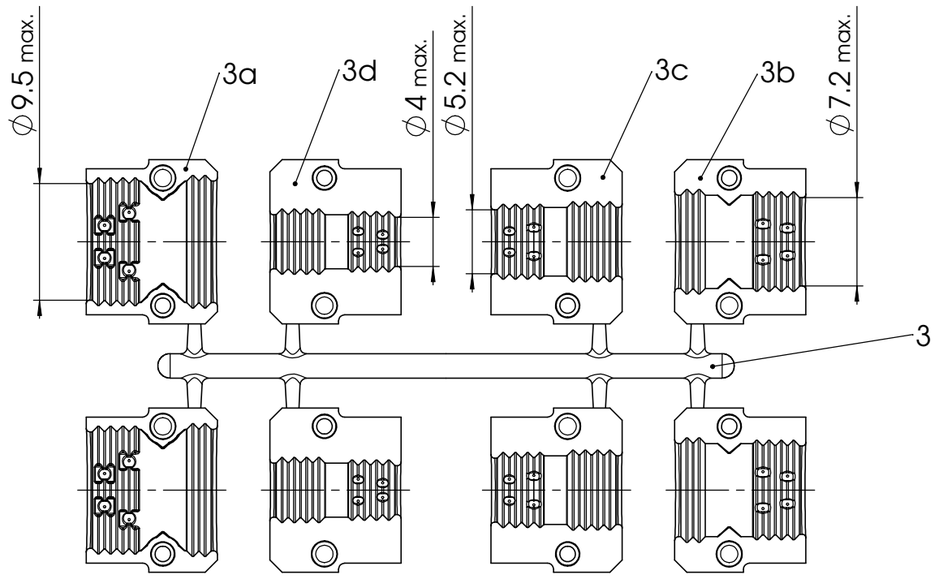

max. torque are 40 Ncm
Part-No. 3 and 4 not mounted

No.	St.	Part	Type Description/Material	Surface plating/Colour/Class
4	1	Knurled thumb screw	FRSMB1/5-K1618 4-40 / Brass	nickel plated
3d	2	Strain relief ø4mm	Polyester	black
3c	2	Strain relief ø5.2mm	Polyester	black
3b	2	Strain relief ø7.2mm	Polyester	black
3a	2	Strain relief ø9.5mm	Polyester	black
3	1	Strain relief module	FZM-3266 / Polyester	black
2	2	Screw	Torx T10 / Case hardened steel	zinc plated
1	1	Hood	FMBR1-5 / Zinc die-cast	nickel plated

REV.	DATE	CH.-NO.
1		

Measurement without tolerance occ. to ISO 2768-m

SCALE 2:1

	NAME / DATE
DRAWN	Anke.Meyer-Richter 16-05-2008
CHECKED	katja.schöber 12-10-2010

FCT group
fctgroup.com

ORIGINAL: DIN A3-DRAWING AS A FILE

TITLE
Metal hood

DWG.NO. FMBR1-5

REV. 1

REPLACEMENT FOR: FMBR1-2_SW

PAGES 1

COMMENT:
ALL RIGHTS ARE RESERVED BY US FOR THIS DRAWING. WITHOUT OUR PRIOR CONSENT,
IT MAY NEITHER BE DUBLICATED NOR MADE AVAILABLE TO A THIRD PARTY,
AND IT ALSO MAY NOT BE IMPROPERLY USED BY TE RECEIVER, OR A THIRD PARTY.