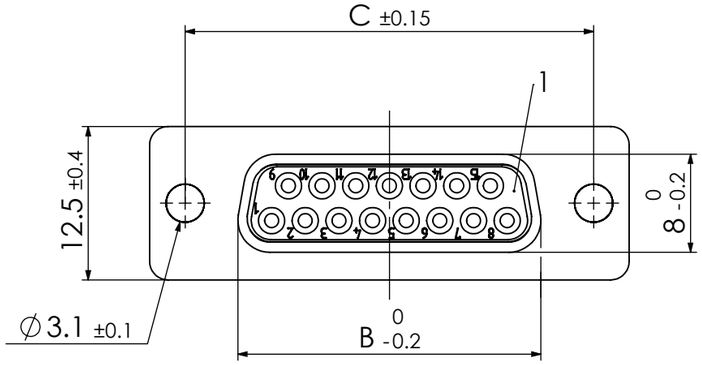

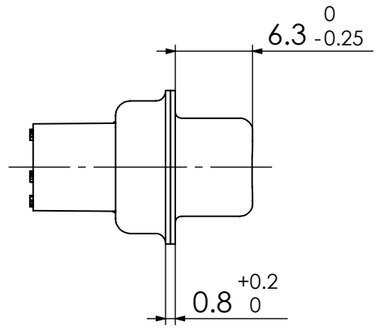

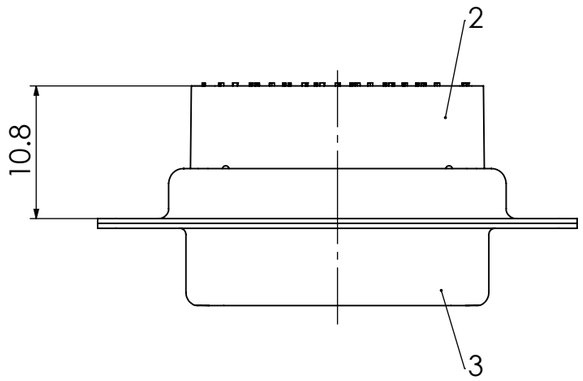

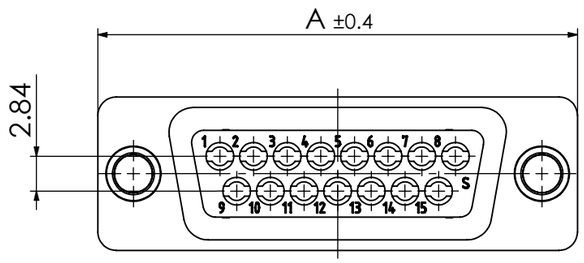

Fy*1)xx*2)S7-K121

e.g. FL25S7-K121

*1) y for series FL or FU
*2) xx No. of contacts 09, 15, 25 or 37

MATERIAL NUMBER	y *1)	xx *2)	A [mm]	B [mm]	C [mm]
1727040010	L	09	30.8	16.4	25
1731090303	U				
1727040002	L	15	39.1	24.7	33.3
1731090446	U				
1727040004	L	25	53	38.5	47.04
1731090294	U				
1727040006	L	37	69.3	54.9	63.5
1731090429	U				

Technical data for modification (FU)

RoHS compliant by exemption

Crimp contacts FK20S (AWG 20-24/1,3µm Au) included in delivery.

3	1	Shell	Steel	tin plated
2	1	Insulator rear part	PEI (-55°C to +130°C)	green
1	1	Insulator front part	PBT acc. UL94V-0	green
No.	*St.*	*Part*	*Type Description/Material*	*Surface plating/Colour/Class*

Technical data for modification (FL)

RoHS compliant

Crimp contacts not supplied with connector. Contacts must be ordered separately.

3	1	Shell	Steel	tin plated
2	1	Insulator rear part	PA(-55°C to +115°C)	black
1	1	Insulator front part	PBT acc. UL94V-0	black
No.	*St.*	*Part*	*Type Description/Material*	*Surface plating/Colour/Class*

FUNCTIONAL SYMBOLS
E = 0
C = 0
D = 0

THIS DRAWING CONTAINS INFORMATION THAT IS PROPRIETARY TO MOLEX ELECTRONIC TECHNOLOGIES, LLC AND SHOULD NOT BE USED WITHOUT WRITTEN PERMISSION

DIMENSION UNITS: mm
SCALE: 2:1
MEASUREMENTS WITHOUT TOLERANCE ACC. TO: ISO 2768-mK

REV.	CH.-NO.
4	24410
3	24130
2	21782
1	

CURRENT REVISION
DRWN: DRAWN BY msteinbrueck 12-02-2024
APPR: APPR BY mteubel 20-02-2024

INITIAL REVISION
DRWN: DRAWN BY Denzinger 25-06-2002
APPR: APPR BY floßmann 25-06-2002

molex

FCT D-Sub Crimp Connector

PRODUCT CUSTOMER DRAWING

MATERIAL NUMBER: see table
REVISION: 4

REPLACEMENT FOR: 1727040010_Rev. A
FRIST ANGLE PROJECTION
DRAWING: A3-SIZE
DOCUMENT NUMBER: FyxxS7-K121
CUSTOMER: GENERAL MARKET
SHEET NUMBER: 1 OF 1

COMMENT:
ALL RIGHTS ARE RESERVED BY US FOR THIS DRAWING, WITHOUT OUR PRIOR CONSENT,
IT MAY NEITHER BE DUBLICATED NOR MADE AVAILABLE TO A THIRD PARTY,
AND IT ALSO MAY NOT BE IMPROPERLY USED BY TE RECEIVER, OR A THIRD PARTY.