Products for Mobile Equipment

Tyco Electronics

TYCO ELECTRONICS "TECHNOLOGY PORTFOLIO"

- Connector Systems / Electromechanical Components
- Relays
- Wireless Products
- Sensors
- Fiber Optic Products
- Wire & Cable
- Application Tooling
- Antennas, GPS Antennas, Integrated Antenna Systems
- Circuit Protection Devices
- Tubing & Harnessing Products
- Touch Screen Displays
- Power Systems
- Electronic Modules
- Resistors & Inductors
- Battery Connectors & Assemblies
- Heat Sinks & Thermal Solutions
- Switches and Knobs
- Identification Labeling Products
- Racks & Panels
- Smart Cards / Leadframes

TYCO ELECTRONICS "AT YOUR SERVICE"

Tyco Electronics Online

The Tyco Electronics website is an innovative and interactive source for application information, product updates and technical solutions.
Our step-by-step software makes our website intuitive and user-friendly to better serve you!
Please contact us at:
www.tycoelectronics.com

Internet Homepage

www.tycoelectronics.com

Electronic Internet Catalog

www.catalog.tycoelectronics.com

Product Information Center (PIC)

You can rely on Tyco Electronics PIC Team to provide you support for answers to your general information or technical questions in an efficient and effective manner.
To reach our PIC staff, please contact your local Tyco Electronics organization.

Product Literature

For more information about Tyco Electronics and its wide range of products we offer you a variety of literature such as product catalogs and a lot of product specific brochures.
For catalogs and product brochures please contact your local Tyco Electronics organization.

Battery Connectors
Switching Coax
Elastomeric Connectors
Battery Packs
SIM Sockets
Antenna Solutions
PolySwitch™
Shield Fingers
W-CDMA I/O Connectors
Button Battery Holders
Custom I/O & Cable: MMIC Series
0.3 mm Pitch FPC Connectors
Super Low Profile Wire-to-Board
Removable Memory Sockets
0.4 mm Pitch Stacking Connectors

Introduction

Tyco Electronics supplies a unique expertise for today's and tomorrow's mobile equipment applications, including cellular phones, mobile media players, digital camera's, GPS, payment terminals and other portable electronics.

We also provide high-level analyses and simulation services to allow OEMs to predict system performance, resulting in faster design cycles and lower costs. In addition our early involvement programs allow us to design next-generation products to support equipment requiring more speed, higher density and lower costs.

Our wide product portfolio for mobile equipment ranges from a variety of connectors (SIM, I/O, Battery, Camera, LCD, Board-to-Board, FPC etc.) to battery packs, antennas circuit protection, cable assemblies and others.

In addition to that Tyco Electronics offers a set of technologies especially developed to offer low applied cost products to our customers in example MID technology (Molded Interconnection Device).

We have several dedicated Mobile Equipment engineering teams to provide you with the best service from persons which understand the way you are doing business.

The teams are dedicated to your success and are located in several regions of the world. These regions are fully equipped with all necessary services such as quick turn sample shop, simulation equipment, test laboratories and others.

Our standard offering is broad and reflected in this catalog. Therefore we are pleased to introduce you to our portfolio for mobile equipment.

10 Reasons to Choose Tyco Electronics for Mobile Equipment Applications

1. Tyco Electronics is committed to customer success!
2. Wide range of products applicable for mobile equipment.
3. Global Sales, Logistics, Development and manufacturing teams in all regions of the world.
4. The most innovative connector company in the industry.
5. Low cost manufacturing locations around the globe.
6. Working with 8 of the top 10 OEM's.
7. Dedicated development teams for mobile equipment.
8. Wide range of (patented) technologies which enable reduction of applied cost.
9. Organization adopted to working with mobile equipment OEM's and ODM's.
10. Our commitment is your advantage.

Table of Contents

Introduction 3
Table of Contents 4
Restriction on the Use of Hazardous Substances (RoHS) 6

Connectors

Generic SIM Connector, 6 Positions 7
Generic SIM Connector, 8 Positions 8
5-Directional SIM Connector 9
Scaleable SIM Connector 10
Super Low Profile SIM Connector with Full Clip 11
Mini UICC SIM Connector 12
Sliding SIM Connector, 8 Positions 13
0.4 mm Pitch 1.0 mm or 1.5 mm Height Board-to-Board Connector 14
0.3 mm FPC Connector 15
Circular Audio Connectors 16
Circular DC Connectors 17
Mini USB Plug 18
Mini USB Receptacle 19
Micro USB Connector 20
Generic Snake and Pad Connector 21
Multi Media Interface Connector 22
MDIC and S-MDIC Connector System, 12 Positions 23
HDMI Connectors, Type C 24
Memory Card Connectors 25
Micro SD Connector 26
Micro SD/SIM Combi Connector 27
Micro SD Adapter 28
Spring Probe Connector (SPC), 1 Position 29
Spring Fingers 30
LCD ITO Connector, 8 Positions 31
LCD Connector 0.65 mm, 10 Positions 32
Standard Switching Coax 33
Standard Switching Coax Test Adapters 34
Standard Switching Coax Right-Angle Cable Plug 35
Standard Switching Coax with ESD Protection 36
MID Micro Switching Coax 37
MID Nano Switching Coax 38
Spring Probe Connector (SPC) 39
Generic Battery Connector, 2 Positions 40
1.6 mm Pitch Low Profile Battery Connector 41
Right-Angle Leaf Spring Battery Connector 42
Battery Block 43
Inboard SMIA 85 Camera Socket 44
Onboard SMIA 85 Camera Socket 45
Super Low Profile (SLP) Connector 46
Micro SLP Connector 47
STAX™ LD Elastomeric Connectors 48
STAX™ Array Connector 50
Elastiboot™ Connectors for Microphones 51
STAX™ Elastomeric Connectors for COG LCDs 52
SMT-ETI-1 STAX™ Connector 53
STAX™ Coax Connector 54
Vibration Motor Connector 55

All specifications subject to change. Consult Tyco Electronics for latest specifications.

Table of Contents (continued)

Antenna Products
Antenna Manufacturing Capabilities 57
RF Engineering Capabilities 60

MID Technology
MID 63

Cable Products
USB Data Cable Assembly 65
Music Cable Assembly 66
Charger Cable Assembly 67
Mobile Phone Headset Solution 68
Bluetooth Hands-Free Solution 69
High-Speed Micro-Coax Cable Assembly (MCC) 70

Batteries
Battery Systems 71

Mechatronic Center Niefern
Technology Portfolio 73
LAMFRAME 74
Mini SIM Card Packaging 75

M/A-COM Antenna Products
GaAs SP6T 2.5 V Power Switch 76

Raychem Circuit Protection Products
Lithium Cells and Battery Packs 77
Rechargeable Battery Pack Protection 78
Portable Electronics Input Port Protection 79
HDMI: LCD, Plasma, HDTV, Set-Top Box, DVD Player 80
Strap Battery Devices – VLR Series 81
Strap Battery Devices – VLP Series 82
Strap Battery Devices – VTP Series 83
Strap Battery Devices – LTP Series 84
Strap Battery Devices – LR4 Series 85
Strap Battery Devices – SRP Series 86
Surface-Mount Devices – nanoSMDC 87
Surface-Mount Devices – microSMD 88
Surface-Mount Devices – miniSMDC 89
Surface-Mount Devices – miniSMDE 90
Fast Acting Fuses 91
Slow Blow Fuses 92
ESD Protection Devices 93

Switches
FSM 6 x 6 Series 95
FSMCT Series 96
FSM 3.4 x 6 Series 97
FSM 0.5 mm 98
Turtle Style 99
CoinKey™ 100

Labels
MP Metalized Polyester Labels 102
Kapton® Labels 104
WP White Polyester Labels 106

Numerical Index 109

Restriction on the Use of Hazardous Substances (RoHS)

At Tyco Electronics, we're ready to support your RoHS requirements. We've assessed more than 1.5 million end items/components for RoHS compliance, and issued new part numbers where any change was required to eliminate the restricted materials. Part numbers in this catalog are identified as:

RoHS Compliant

Part numbers in this catalog are RoHS Compliant, unless marked otherwise.

These products comply with European Union Directive 2002/95/EC as amended 1 January 2006 that restricts the use of lead, mercury, cadmium, hexavalent chromium, PBB, and PBDE in certain electrical and electronic products sold into the EU as of 1 July 2006.

Note: For purposes of this Catalog, included within the definition of RoHS Compliant are products that are clearly "Out of Scope" of the RoHS Directive such as hand tools and other non-electrical accessories.

Non-RoHS Compliant

These part numbers are identified with a "♦" symbol. These products do not comply with the material restrictions of the European Union Directive 2002/95/EC.

5 of 6 Compliant

A "●" symbol identifies these part numbers. These products do not fully comply with the European Union Directive 2002/95/EC because they contain lead in solderable interfaces (they do not contain any of the other five restricted substances above allowable limits). However, these products may be suitable for use in RoHS applications where there is an application-based exception for lead in solders, such as the server, storage, or networking infrastructure exemption.

Note: Information regarding RoHS compliance is provided based on reasonable inquiry of our suppliers and represents our current actual knowledge based on the information provided by our suppliers. This information is subject to change. For latest compliance status, refer to our website referenced below.

Getting the Information You Need

Our comprehensive on-line RoHS Customer Support Center provides a forum to answer your questions and support your RoHS needs. A RoHS FAQ (Frequently Asked Questions) is available with links to more detailed information. You can also submit RoHS questions and receive a response within 24 hours during a normal work week. The Support Center also provides:

- Cross-Reference from Non-compliant to Compliant Products
- Ability to browse RoHS Compliant Products in our on-line catalog: http://ecommas.tycoelectronics.com/commerce/alt/RohsAltHome.do
- Downloadable Technical Data Customer Information Presentation
- More detailed information regarding the definitions used above

RoHS Customer Support Center

So whatever your questions when it comes to RoHS, we've got the answers at www.tycoelectronics.com/leadfree

Generic SIM Connector, 6 Positions

Generic SIM Connector, 6 Positions

Features

SIM (Security Identity Module) and UIM (Universal Identity Modules) cards have been and continue to be used in mobile equipment. Tyco Electronics offers a wide selection of low cost SMT SIM connectors with heights from 1.9 mm to 4.0 mm depending on your height requirements. Several variations have been tooled with and without ribs or positive stop (contact retention feature). This product works with SIM cards of Generation 1, 2 and 3.

All variations are packaged in tape & reel for pick and place manufacturing.

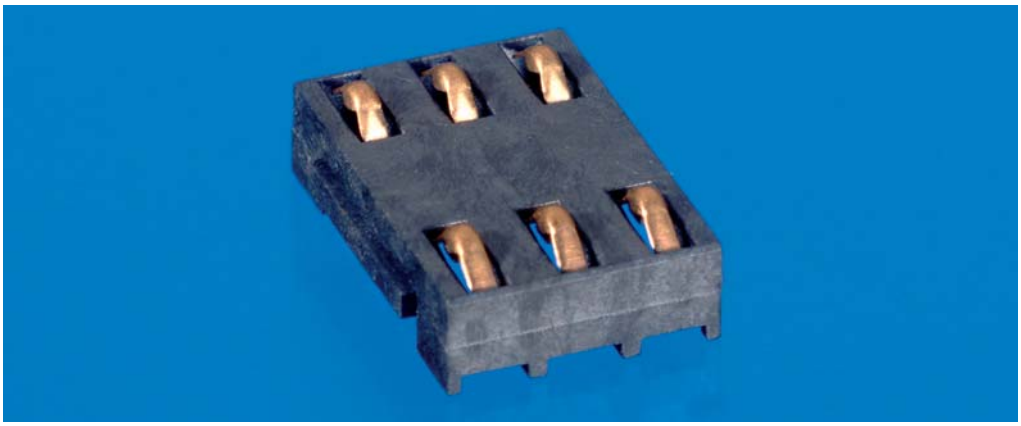

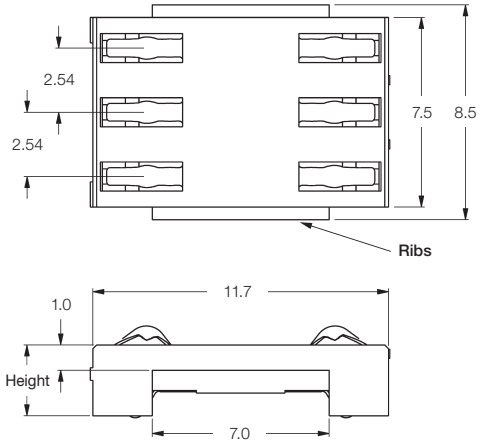

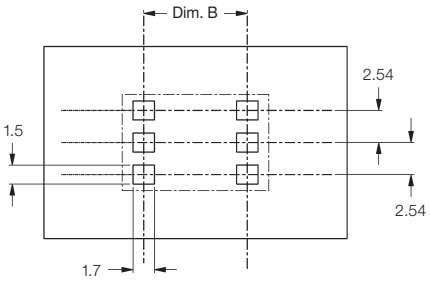

PCB Layout

Material and Finish

Insulator:
LCP, glass-filled, black color

Contact Pin:
Phosphor bronze

Contact Plating:
Selectively gold over nickel plated

Documentation

Drawing:
C-338063

Product Specification:
108-19122

Test Report:
501-19011

Application Specification:
114-19054

Height (mm)	Part Numbers				Package Quantity (Pieces per Reel)
	without Contact Retention		with Contact Retention		
	with Ribs	without Ribs	with Ribs	without Ribs	
1.9	**1-338063-9**	**1-1377227-9**	1-1483288-9	1-1483437-9	1400
2.0	**2-338063-0**	**2-1377227-0**	2-1483288-0	2-1483437-0	1400
2.1	2-338063-1	2-1377227-1	2-1483288-1	2-1483437-1	1400
2.2	**2-338063-2**	**2-1377227-2**	2-1483288-2	2-1483437-2	1400
2.3	2-338063-3	2-1377227-3	2-1483288-3	2-1483437-3	1400
2.4	**2-338063-4**	**2-1377227-4**	2-1483288-4	**2-1483437-4**	1400
2.5	**2-338063-5**	**2-1377227-5**	2-1483288-5	2-1483437-5	1400
2.6	**2-338063-6**	**2-1377227-6**	2-1483288-6	2-1483437-6	1400
2.7	2-338063-7	2-1377227-7	2-1483288-7	2-1483437-7	1400
2.8	**2-338063-8**	**2-1377227-8**	2-1483288-8	2-1483437-8	1140
2.9	2-338063-9	2-1377227-9	2-1483288-9	2-1483437-9	1140
3.0	3-338063-0	3-1377227-0	3-1483288-0	3-1483437-0	1140
3.1	3-338063-1	3-1377227-1	3-1483288-1	3-1483437-1	1140
3.2	3-338063-2	3-1377227-2	3-1483288-2	3-1483437-2	1140
3.3	3-338063-3	3-1377227-3	3-1483288-3	3-1483437-3	1140
3.4	3-338063-4	3-1377227-4	3-1483288-4	3-1483437-4	1140
3.5	3-338063-5	3-1377227-5	3-1483288-5	3-1483437-5	1140
3.6	3-338063-6	3-1377227-6	3-1483288-6	3-1483437-6	1140
3.7	**3-338063-7**	**3-1377227-7**	3-1483288-7	3-1483437-7	1140
3.8	3-338063-8	3-1377227-8	3-1483288-8	3-1483437-8	1140
3.9	3-338063-9	3-1377227-9	3-1483288-9	3-1483437-9	1140
4.0	**4-338063-0**	**4-1377227-0**	4-1483288-0	4-1483437-0	1140

Bold Part Numbers are tooled

Generic SIM Connector, 8 Positions

Features

SIM (Security Identity Module) and UIM (Universal Identity Modules) cards have been and continue to be used in mobile equipment. Tyco Electronics offers a wide selection of low cost SMT SIM connectors with heights from 1.9 mm to 4.0 mm depending on your height requirements.

All variations are packaged in tape & reel for pick and place manufacturing.

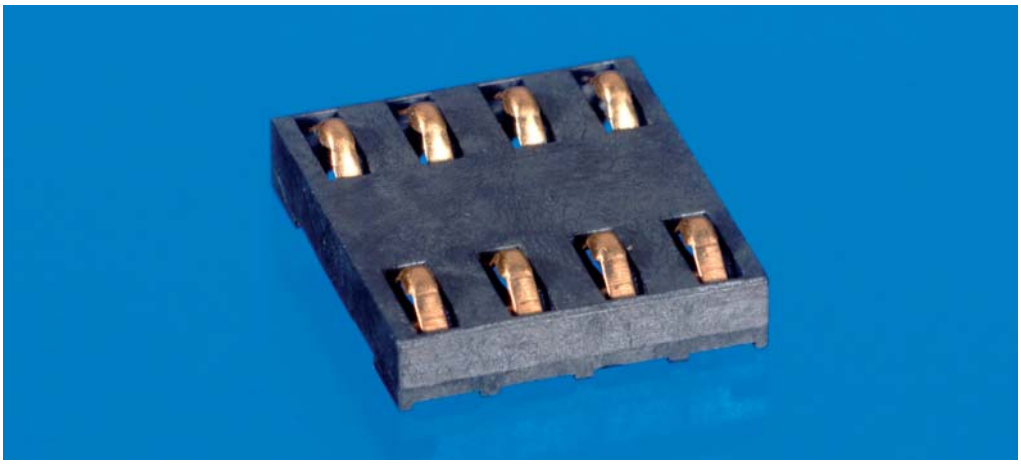

Material and Finish

Insulator:
LCP, glass-filled, black color

Contact Pin:
Phosphor bronze

Contact Plating:
Selectively gold over nickel plated

Documentation

Drawing:
C-338123

Product Specification:
108-19122

Test Report:
501-19011

Application Specification:
114-19054

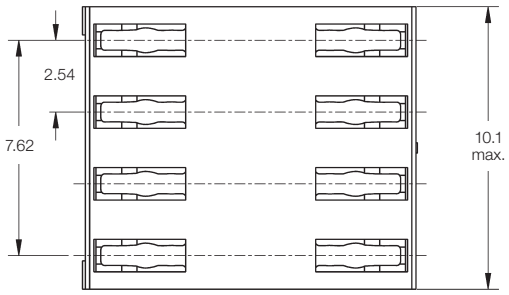

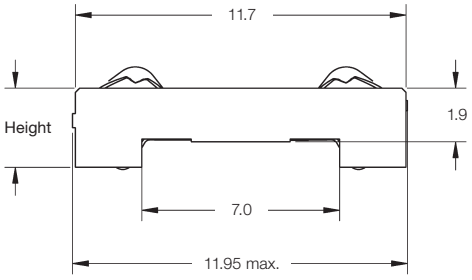

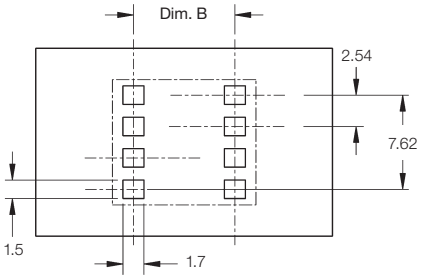

PCB Layout

Height (mm)	Part Number	Package Quantity (Pieces/Reel)
1.9	1-338123-9	1100
2.0	2-338123-0	1100
2.1	**2-338123-1**	1100
2.2	2-338123-2	1100
2.3	2-338123-3	1100
2.4	2-338123-4	1100
2.5	2-338123-5	1100
2.6	2-338123-6	1100
2.7	2-338123-7	1100
2.8	2-338123-8	1100
2.9	2-338123-9	890

Height (mm)	Part Number	Package Quantity (Pieces/Reel)
3.0	3-338123-0	890
3.1	3-338123-1	890
3.2	3-338123-2	890
3.3	3-338123-3	890
3.4	3-338123-4	890
3.5	3-338123-5	890
3.6	3-338123-6	890
3.7	3-338123-7	890
3.8	3-338123-8	890
3.9	3-338123-9	890
4.0	4-338123-0	890

Bold Part Number is tooled

All specifications subject to change. Consult Tyco Electronics for latest specifications.

5-Directional SIM Connector

5-Directional SIM Connector

Features

Can be mated from 5 directions, left, right, front, back and top.

The completely deep drawn contact nose provides smooth insertion and minimal card wear under any condition.

Height range from 1.5 mm to 5.0 mm possible, while maintaining 0.5 mm contact deflection (GSM Specification).

This product works with SIM cards of Generation 1, 2 and 3.

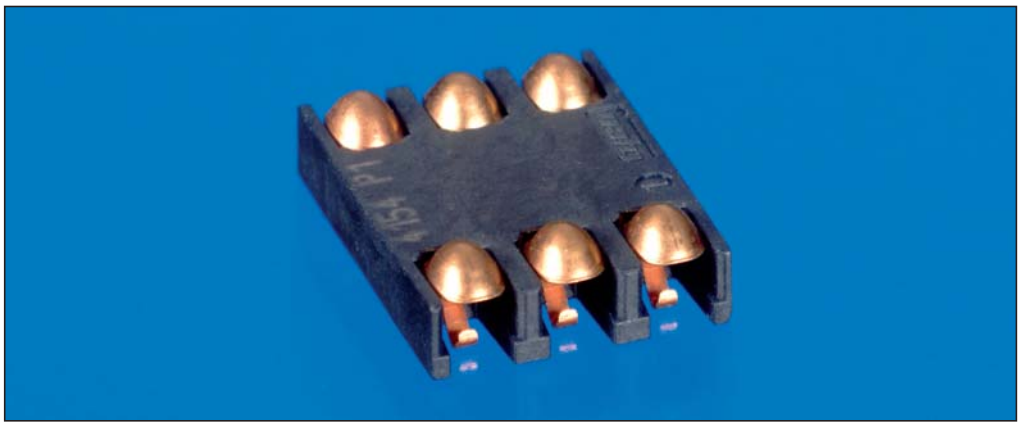

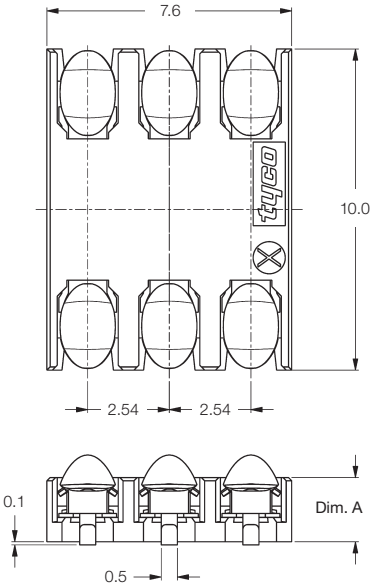

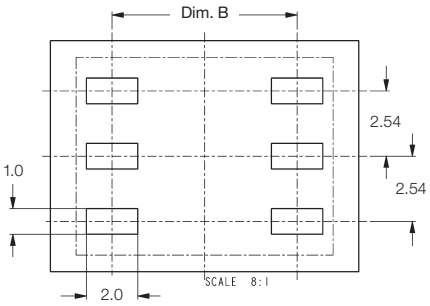

PCB Layout

Material and Finish

Insulator:
GF liquid crystal polymer, black color

Contact Pin:
Copper alloy

Contact Plating:
1.2 µm nickel underlayer,
1.25 µm gold at card side,
0.1–0.2 µm gold at solder side

Documentation

Drawing:
C-1705300

Product Specification:
108-19280

Test Report:
501-19095

Application Specification:
114-19092

Dimensions (mm)		Part Number	Package Quantity (Pieces/Reel)
A	B		
1.5	7.7	**1-1705300-5**	1450
1.6	7.7	**1-1705300-6**	1450
1.7	7.7	**1-1705300-7**	1450
1.8	7.6	**1-1705300-8**	1450
1.9	7.6	**1-1705300-9**	1450
2.0	7.5	**2-1705300-0**	1450
2.1	7.3	**2-1705300-1**	1450
2.2	7.2	**2-1705300-2**	1450
2.3	7.0	**2-1705300-3**	1450
2.4	6.7	**2-1705300-4**	1450
2.5	7.7	2-1705300-5	1150
2.6	7.5	2-1705300-6	1150
2.7	7.2	2-1705300-7	1150
2.8	6.9	2-1705300-8	1150
2.9	7.7	2-1705300-9	1150
3.0	7.4	3-1705300-0	1150
3.1	7.0	3-1705300-1	1150
3.2	7.7	3-1705300-2	1150

Dimensions (mm)		Part Number	Package Quantity (Pieces/Reel)
A	B		
3.3	7.3	3-1705300-3	1450
3.4	6.7	3-1705300-4	1450
3.5	7.6	3-1705300-5	950
3.6	7.1	3-1705300-6	950
3.7	7.6	3-1705300-7	950
3.8	7.1	3-1705300-8	950
3.9	7.5	3-1705300-9	950
4.0	6.8	4-1705300-0	950
4.1	7.5	4-1705300-1	950
4.2	6.8	4-1705300-2	950
4.3	7.6	4-1705300-3	950
4.4	6.8	4-1705300-4	950
4.5	7.7	4-1705300-5	800
4.6	6.9	4-1705300-6	800
4.7	7.6	4-1705300-7	800
4.8	6.6	4-1705300-8	800
4.9	7.6	4-1705300-9	800
5.0	6.6	5-1705300-0	800

Bold Part Numbers are tooled

Scaleable SIM Connector

Features

Scaleable SIM connector height from 0.7 mm to 2.0 mm (housing height), featuring two different kind of clips.

1 clip allover (1 piece clip design). The one piece clip design prevents for card bow.

2 piece clip design allows easy removal of the SIM card.

Both versions have contact retention (anti lifting) features and smooth rounded contacts in order to decrease card wear to the minimum.

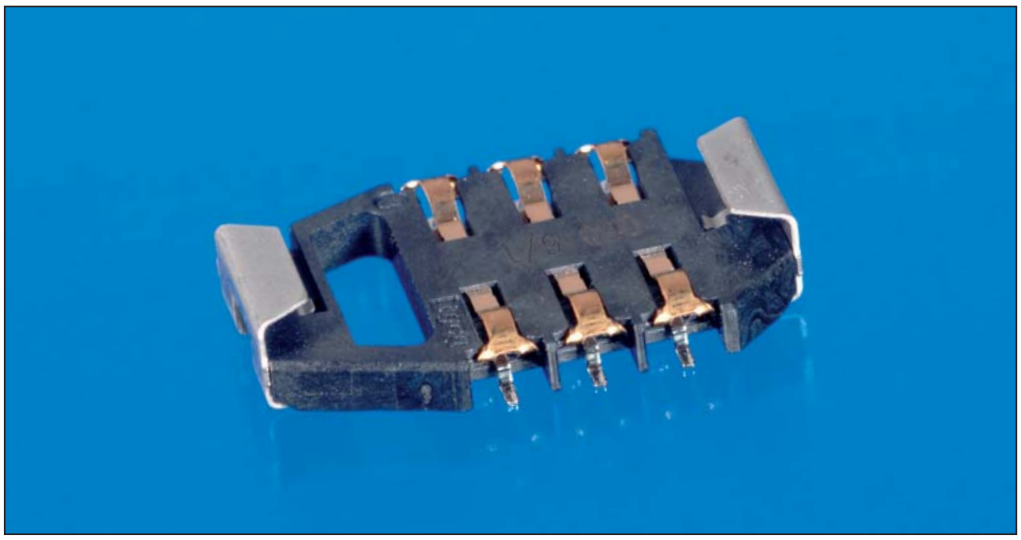

Material and Finish

Insulator:
GF liquid crystal polymer, black color

Contact Pin:
Copper alloy

Contact Plating:
1.2 µm nickel underlayer, 1.25 µm gold at card side, 0.1–0.2 µm gold at solder side

Clip:
Stainless steel/phosphor bronze

Clip Plating:
3.0 µm Sn allover, over 1.3 µm nickel underlayer

			Part Numbers	
Total Height (mm)	Housing Height (mm)	SIM with Card Stop Clip Allover (1000 Pieces per Reel)	SIM without Card Stop Clip Allover (750 Pieces per Reel)	SIM without Card Stop 2-Piece Clip (1100 Pieces per Reel)
1.9	0.7	**1747314-1**	–	–
2.0	0.8	–	–	–
2.1	0.9	**1871406-1**	–	–
2.2	1.0	–	–	–
2.3	1.1	–	–	–
2.4	1.2	**2-292292-4**	–	–
2.5	1.3	2-292292-5	–	1-1705615-3
2.6	1.4	2-292292-6	2-292373-6	**1-1705615-4**
2.7	1.5	**2-292292-7**	2-292373-7	1-1705615-5
2.8	1.6	2-292292-8	2-292373-8	**1-1705615-6**
2.9	1.7	**2-292292-9**	2-292373-9	1-1705615-7
3.0	1.8	3-292292-0	3-292373-0	1-1705615-8
3.1	1.9	**3-292292-1**	3-292373-1	1-1705615-9
3.2	2.0	–	**3-292373-2**	2-1705615-0

Bold Part Numbers are tooled

Documentation	Part No. 1705615	Part No. 292292	Part No. 292373	Part No. 1747314
Customer Drawing	C-1705615	C-292292	C-292373	C-1747314
Product Specification	108-19241	108-60031	108-60031	108-5998
Test Report	501-19069	501-60001	501-60001	501-5559
Application Specification	114-19075	not available	not available	not available

All specifications subject to change. Consult Tyco Electronics for latest specifications.

Super Low Profile SIM Connector with Full Clip

Super Low Profile SIM Connector with Full Clip

Features

- Connector Height = 1.55 mm max.
- Size (H x W x L): 1.43 x 16.3 x 17.5 mm
- Big clip totally encapsulates SIM contact area
- Soldered clips provide additional mechanical stability
- Datecode printed on the product

Material and Finish

Housing:
LCP

Contacts:
Copper alloy 1.3 µm nickel underlayer 0.4 µm gold in the contact area and 0.05 µm gold in the soldering area

Clip:
Stainless steel 1.3 µm nickel underlayer, tin plated all over

Documentation

Drawing:
C-1981898

Product Specification:
108-78472

Test Report:
See Product Specification

Application Specification:
114-19075

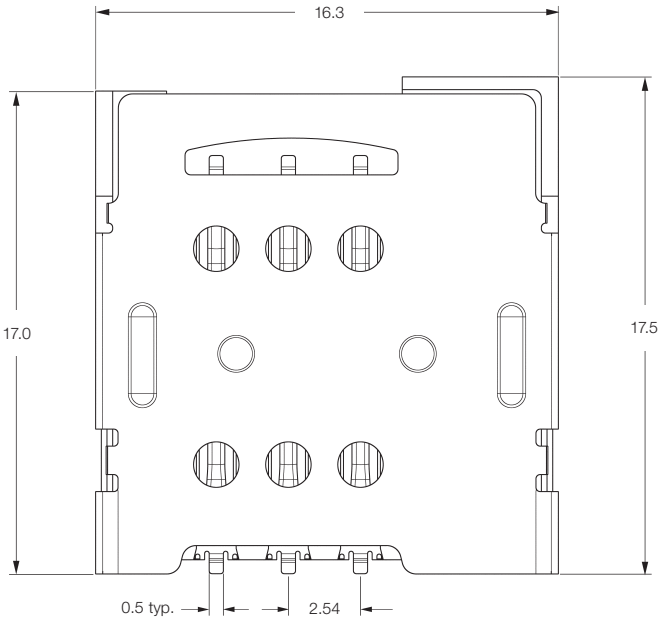

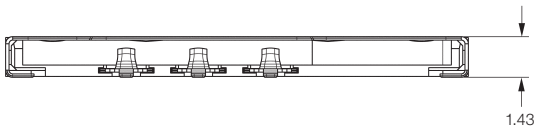

Part No. **1981898-1**

Package Quantity:
1000 pcs per reel

Mini UICC SIM Connector

Features

This sliding SIM connector has been developed for usage with third generation SIM cards.

The scaleable connector is available in heights from 1.2 mm to 1.9 mm (housing height). The forky contact provides a preload as well as anti lifting capabilities. The smooth and rounded contacts ensure minimal card wear, while the clip keeps the card in position during usage.

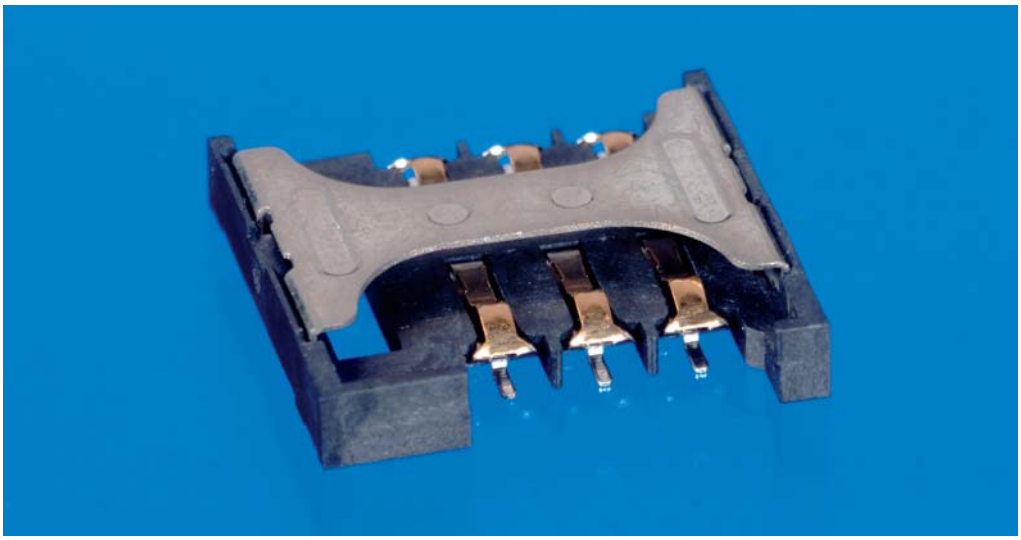

Material and Finish

Insulator:
GF liquid crystal polymer, black color

Contact Pin:
Copper alloy

Contact Plating:
1.2 µm nickel underlayer, 1.25 µm gold at card side, 0.1–0.2 µm gold at solder side

Clip:
Stainless steel

Clip Plating:
3.0 µm Sn allover, over 1.3 µm nickel underlayer

Documentation

Drawing:
C-1705813

Product Specification:
108-19241

Test Report:
501-19069

Application Specification:
114-19075

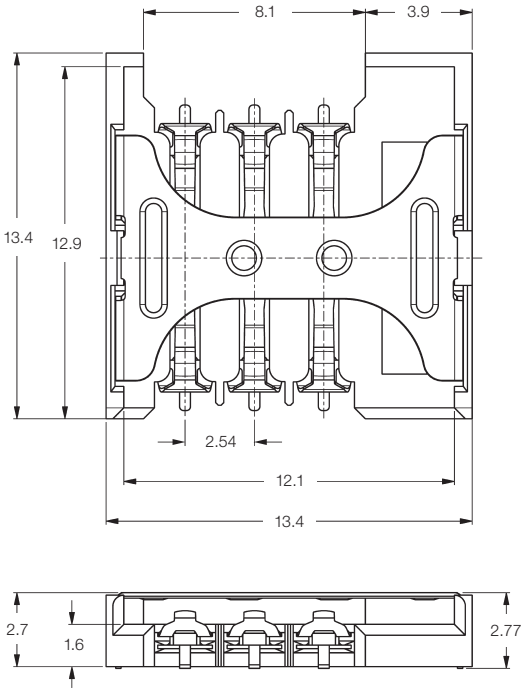

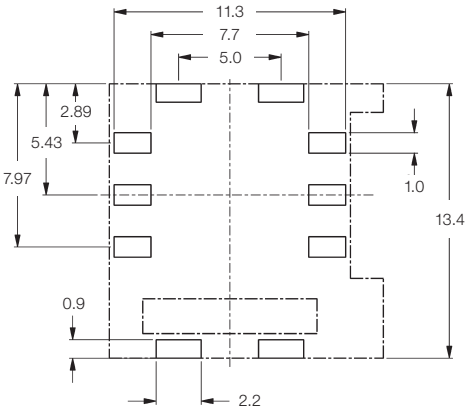

PCB Layout

Total Height (mm)	Housing Height (mm)	Part Number	Package Quantity (Pieces/Reel)
1.9	0.7	1827465-1	1000
2.4	1.2	1-1705813-2	1000
2.5	1.3	1-1705813-3	1000
2.6	1.4	1-1705813-4	1000
2.7	1.5	1-1705813-5	1000
2.8	1.6	1-1705813-6	1000
2.9	1.7	1-1705813-7	1000
3.0	1.8	1-1705813-8	1000
3.1	1.9	1-1705813-9	1000

Bold Part Numbers are tooled

All specifications subject to change. Consult Tyco Electronics for latest specifications.

Sliding SIM Connector, 8 Positions

Features

SIM (Security Identity Module) and UIM (Universal Identity Modules) cards have been and continue to be used in mobile equipment.

Tyco Electronics offers a wide selection of low cost SMT sliding SIM connectors.

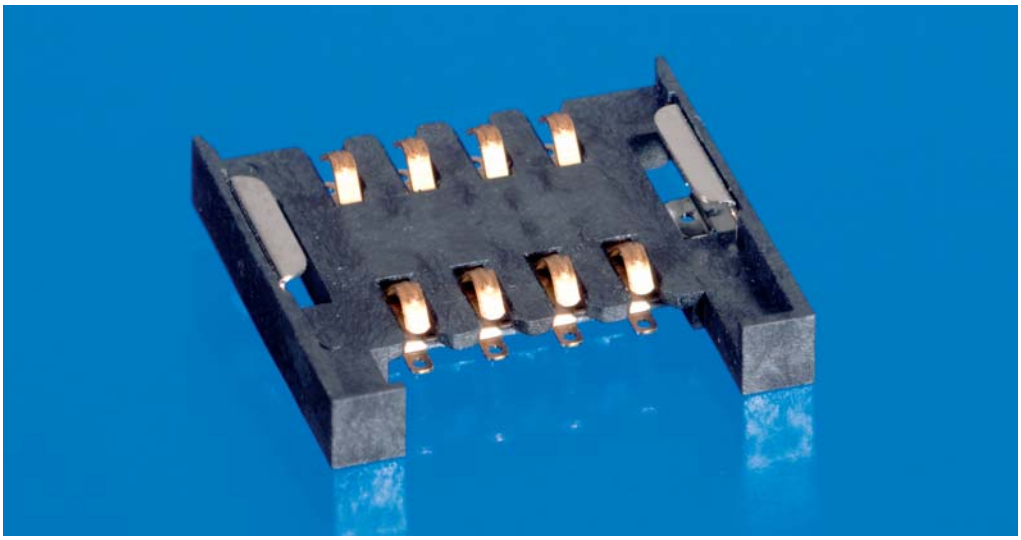

Material and Finish

Insulator:
Thermoplastic HT, UL 94 V-0 rated, black color

Contact Pin:
Copper alloy

Contact Plating:
Selective gold over nickel plated

Clip:
Brass, tin over nickel plated

Documentation

Drawing:
C-1857118

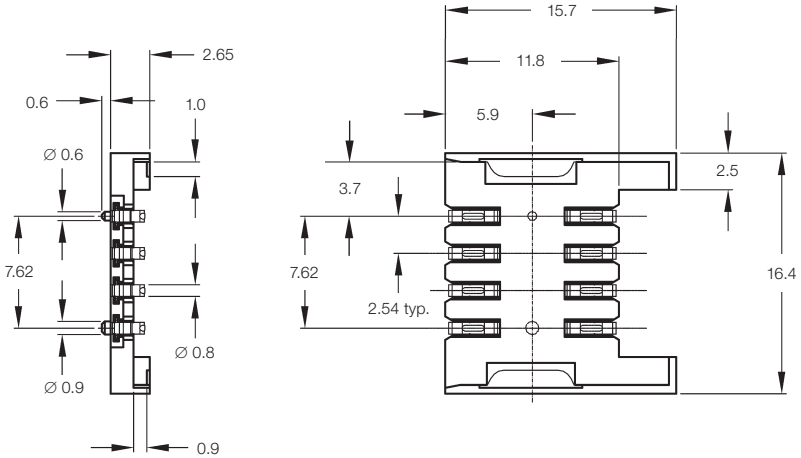

Part No. **1857118-1**

Package Quantity:
800 Pieces per Reel

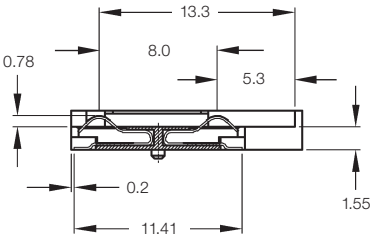

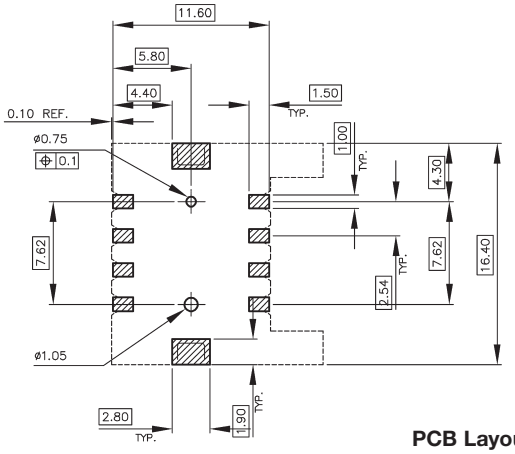

PCB Layout

0.4 mm Pitch 1.0 mm or 1.5 mm Height Board-to-Board Connector

Features

1.0 mm or 1.5 mm mated height low profile stacking connector.

Connector body width is only 2.7 mm and enables space saving.

Formed contacts provide contact points on rolled surface enabling high reliability.

Multiple point contact system is available (see note in table).

For the latest information please contact your local sales engineer.

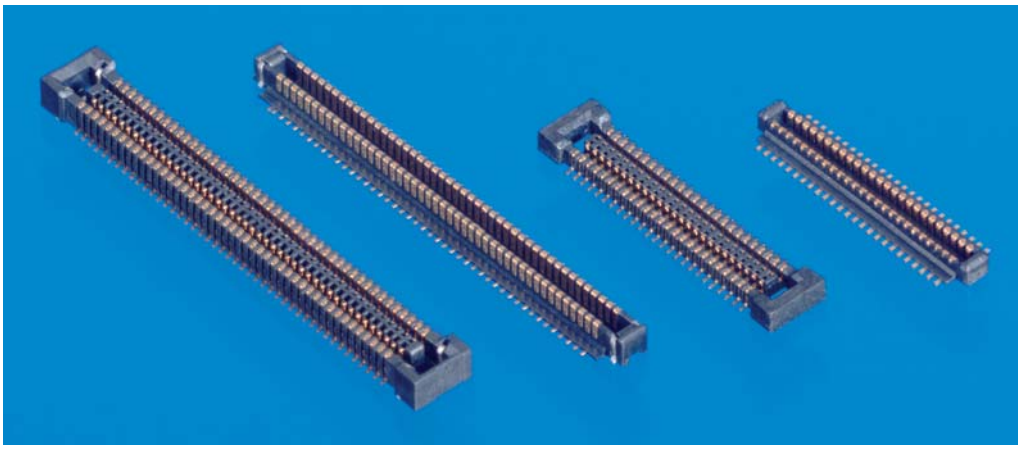

Material and Finish

Insulator:
Thermoplastic, black color

Contact Pin:
Copper alloy

Contact Plating:
Gold plating over nickel underplating

Documentation

Drawing:
C-See table

Product Specification:
108-5901

Test Report:
501-5570

Instruction Sheet:
411-78159

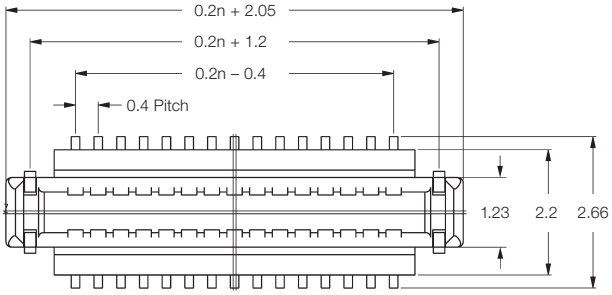

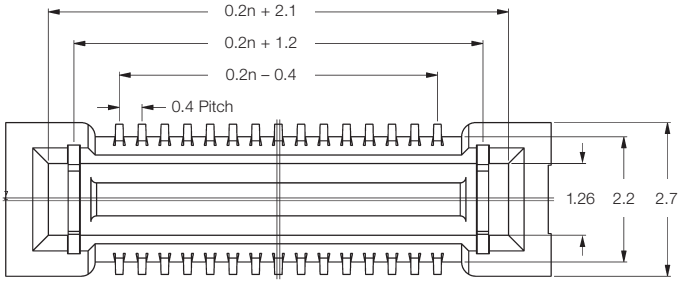

No. of Positions	Stacking Height 1.0 mm				Stacking Height 1.5 mm			
	Plug	Receptacle	Prototype Tool	Mass Production Tool	Plug	Receptacle	Prototype Tool	Mass Production Tool
10	1-1871566-0	1-1747769-0	X	–	1-1871275-0	1-1871274-0	X	–
12	1-1871566-2	1-1747769-2	X	–	1-1871275-2	1-1871274-2	–	–
16	1-1871566-6	1-1747769-6	X	–	1-1871275-6	1-1871274-6	–	–
20	2-1871566-0	2-1747769-0	–	X	2-1871275-0	2-1871274-0	–	–
22	2-1871566-2	2-1747769-2	X	–	2-1871275-2	2-1871274-2	–	–
24	2-1871566-4	2-1747769-4	–	X	2-1871275-4	2-1871274-4	–	X
28	2-1871566-8	2-1747769-8	X	–	2-1871275-8	2-1871274-8	–	–
30	3-1871566-0	3-1747769-0	X	–	3-1871275-0	3-1871274-0	–	–
40	4-1871566-0	4-1747769-0	X	–	4-1871275-0	4-1871274-0	–	–
46	4-1871566-6	4-1747769-6	–	X	4-1871275-6	4-1871274-6	–	–
50	5-1871566-0	5-1747769-0	–	X	5-1871275-0	5-1871274-0	–	–
54	5-1871566-4	5-1747769-4	–	–	5-1871275-4	5-1871274-4	–	X
56	5-1871566-6	5-1747769-6	–	–	5-1871275-6	5-1871274-6	–	X
60	6-1871566-0	6-1747769-0	–	X	6-1871275-0	6-1871274-0	–	–
70	7-1871566-0	7-1747769-0	–	–	7-1871275-0	7-1871274-0	–	–
80	8-1871566-0	8-1747769-0	X	–	8-1871275-0	8-1871274-0	–	–

Stacking Height 1.0 mm: Plugs and Receptacles 4000 per Reel **Stacking Height 1.5 mm:** Plugs and Receptacles 3000 per Reel

Please contact sales for other pin counts.

All specifications subject to change. Consult Tyco Electronics for latest specifications.

0.3 mm FPC Connector

Features

1.0 mm height low profile and 3.8 mm width narrow FPC connector for space saving.

FCP is securely connected with easy one touch flip lever actuator.

For the latest information please contact your local sales engineer.

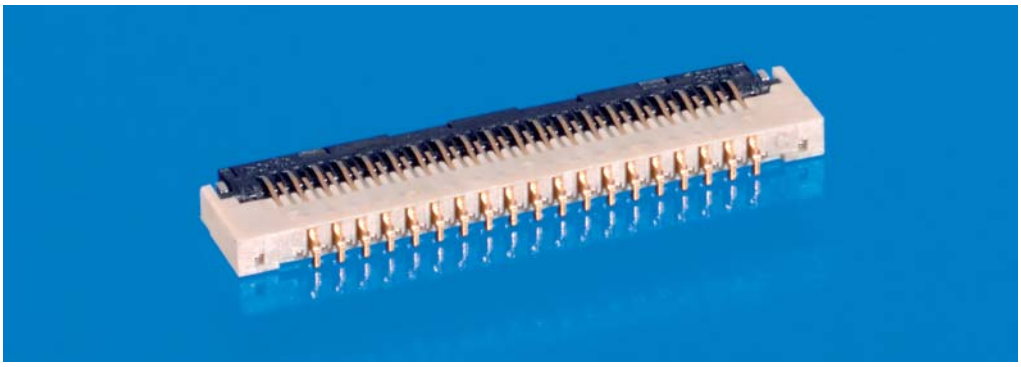

Material and Finish

Insulator:
Thermoplastic

Color:
Body: beige, Actuator: black

Contact Pin:
Copper alloy

Contact Plating:
Gold plating over nickel underplating

Documentation

Drawing:
C-1746237

Product Specification:
108-5944

Test Report:
501-5647

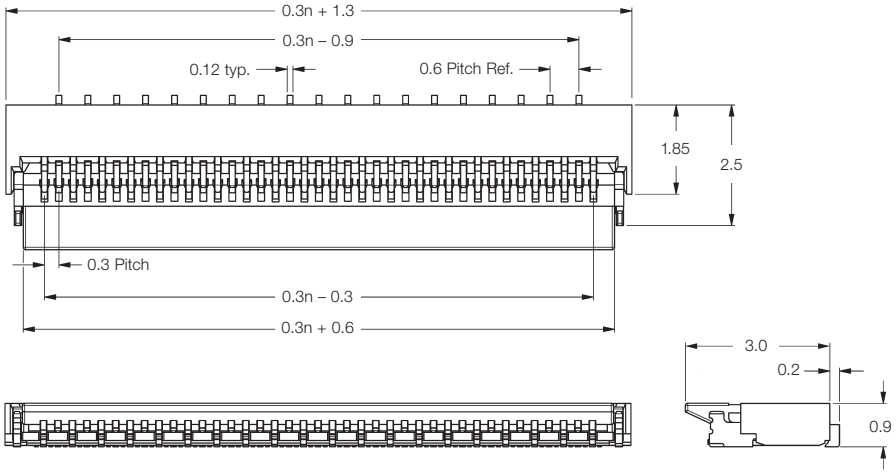

No. of Positions	Part Numbers		
	Narrow Type		Standard Type
	Front Flip Lock	Back Flip Lock	Front Flip Lock
11	1827827-1	1827674-1	1746237-1
13	1827827-2	1827674-2	1746237-2
15	1827827-3	1827674-3	1746237-3
17	1827827-4	1827674-4	1746237-4
19	1827827-5	1827674-5	1746237-5
21	1827827-6	1827674-6	1746237-6
23	1827827-7	1827674-7	1746237-7
25	1827827-8	1827674-8	1746237-8
27	1827827-9	1827674-9	1746237-9
29	1-1827827-0	1-1827674-0	1-1746237-0
31	1-1827827-1	1-1827674-1	1-1746237-1
33	1-1827827-2	1-1827674-2	1-1746237-2
35	1-1827827-3	1-1827674-3	1-1746237-3
37	1-1827827-4	1-1827674-4	1-1746237-4
39	1-1827827-5	1-1827674-5	1-1746237-5
41	1-1827827-6	1-1827674-6	1-1746237-6
43	1-1827827-7	1-1827674-7	1-1746237-7
45	1-1827827-8	1-1827674-8	1-1746237-8
47	1-1827827-9	1-1827674-9	1-1746237-9
49	2-1827827-0	2-1827674-0	2-1746237-0
51	2-1827827-1	2-1827674-1	2-1746237-1
53	2-1827827-2	2-1827674-2	2-1746237-2
55	2-1827827-3	2-1827674-3	2-1746237-3
57	2-1827827-4	2-1827674-4	2-1746237-4

Package Quantity: 4000 Pieces per Reel

Please contact sales for available pin counts.

Circular Audio Connectors

Features

Tyco Electronics offers several circular Audio Connectors for usage with 3.5 mm or 2.5 mm diameter plug. The mounting style, which can be either SMD or compressive, where the compressive style does not require a solder connection and is invulnerable for forces applied to the connection.

Material and Finish:

See drawing

Documentation

Drawing:
See table

Product Specification:
See table

Test Report:
See table

Part Number	Package Quantity (Pieces)	Plug Diameter (mm)	Connection Style	Length (mm)	Width (mm)	Height (mm)	Switch	Location Pins	Product Specification	Test Report
1705058-1 [1]	4000 per Box	2.5	Compressive	13.5	7.2	5.0	Y	N/A	108-19TBA	501-19TBA
1775250-1	1000 per Reel	2.5	SMD	11.6	7.7	3.0	Y	Y	108-57570	501-57660
1470964-1	1000 per Reel	2.5	SMD	6.8	11.6	3.0	Y	Y	108-57466	501-57536
1377032-3 [2]	3000 per Box	3.5	Compressive	12.7	13.0	5.0	Y	N/A	108-19190	501-19056
1377032-2 [2]	3000 per Box	3.5	Compressive	12.7	13.0	5.0	Y	N/A	108-19190	501-19056
1470033-1	50 per Tube	3.5	TH	14.2	9.2	4.5	Y	Y	108-57185	501-57175
1470164-1	310 per Tray	3.5	TH	14.0	9.0	4.5	Y	Y	108-57147	501-57130
440217-1 [3]	55 per Tube	3.5	TH	14.2	9.2	4.5	Y	Y	108-57047	501-57121
440217-2 [4]	55 per Tube	3.5	TH	14.2	9.2	4.5	Y	Y	108-57047	501-57121
1470636-1	700 per Reel	3.5	TH	13.5	6.0	5.0	Y	Y	108-57296	501-57326
1470636-2	200 per Tray	3.5	TH	13.5	6.0	5.0	Y	Y	108-57296	501-57326
1470778-1	700 per Reel	3.5	TH	13.5	6.0	5.0	Y	Y	108-57296	501-57399
440343-1	250 per Tray	3.5	TH	15.0	10.8	7.3	Y	Y	108-57462	501-57532

[1] Not yet tooled
[2] Audio + DC, Application Specification 114-19046
[3] Ring Color Silvery White
[4] Ring Color Black

All specifications subject to change. Consult Tyco Electronics for latest specifications.

Circular DC Connectors

Features

Tyco Electronics offers several Circular DC Connectors for usage with 3.5 mm or 2.5 mm diameter plug.

The mounting style, which can be either SMD or compressive, where the compressive style does not require a solder connection and is invulnerable for forces applied to the connection.

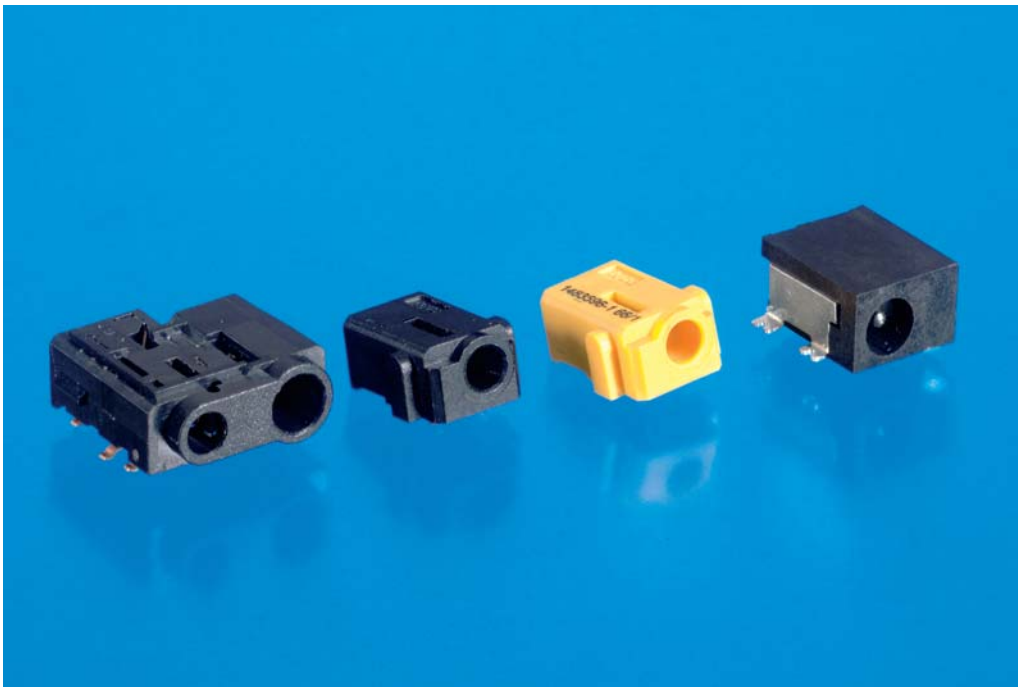

Material and Finish:

See drawing

Documentation

Drawing:
See table

Product Specification:
See table

Test Report:
See table

Part Number	Package Quantity (Pieces)	DC Plug Diameter (mm)	Connection Style	Length (mm)	Width (mm)	Height (mm)	Switch	Pin Diameter (mm)	Location Pins	Product Specification	Test Report
1470177-1	800 per Reel	3.5	SMD	9.3	8.0	5.2	Y	1.00	Y	108-57176	501-57187
1470177-2	800 per Reel	3.5	SMD	9.3	8.0	5.2	Y	1.30	Y	108-57176	501-57187
1857353-1	1000 per Reel	3.5	SMD	9.3	8.0	5.3	Y	1.00	Y	–	–
1857353-2	1000 per Reel	3.5	SMD	9.3	8.0	5.3	Y	1.30	Y	–	–
1377032-3 [1)]	3696 per Box	3.5	Compressive	12.7	13.0	5.0	Y	1.00	N/A	108-19190	501-19056
1377032-2 [1)]	3696 per Box	3.5	Compressive	12.7	13.0	5.0	Y	1.25	N/A	108-19190	501-19056
1483596-2 [2)]	308 per Tray	2.5	Compressive	10.3	6.2	4.5	N	0.65	N/A	108-19278	501-19TBA
1483596-1 [3)]	308 per Tray	2.5	Compressive	10.3	6.2	4.5	N	0.65	N/A	108-19278	501-19TBA

[1]) Audio + DC, Application Specification 114-19046
[2]) Application Specification 114-19091
[3]) Color Yellow

Mini USB Plug

Features

Tyco Electronics offers a complete range of (Mini) USB receptacles, cables and plugs.

The system is fully compliant with the USB specification and supports data transmission speeds >USB 2.0 full speed.

Material and Finish

Insulator:
LCP, glass-filled, black color

Contact Pin:
Phosphor bronze

Contact Plating:
Selectively plated gold over nickel

Documentation

Drawing:
C-1734205

Product Specification:
108-57062

Test Report:
501-57070

Mini B Plugs

No. of Contacts	Type	Color	Description	Part Number	Package Quantity (Pieces)
4	Mini B	Black	Mini B Plug with Contact Insert 4 Positions	1734205-1	1000 per Bag
5	Mini B	Black	Mini B Plug with Contact Insert 5 Positions	1-1734205-1	1000 per Bag
Not applicable	Mini B	Not applicable	Top and Front Shield	3-1734205-1	1000 per Bag
Not applicable	Mini B	Not applicable	Bottom Shield	4-1734205-1	1000 per Bag

USB 2.0 Type A to Mini B Cable Assemblies

No. of Conductors	Plug 1	Plug 2	Color	Description	Length (mm)	Part Number	Package Quantity (Pieces)
4	USB Type A	Mini B	Black	Standard USB-A to Mini-B Assembly, 1.0 M	1000	1496476-1	275 per Box
				Standard USB-A to Mini-B Assembly, 1.5 M	1500	1496476-2	220 per Box
				Standard USB-A to Mini-B Assembly, 2.0 M	2000	1496476-3	150 per Box
				Standard USB-A to Mini-B Assembly, 3.0 M	3000	1496476-4	110 per Box
				Standard USB-A to Mini-B Assembly, 5.0 M	5000	1496476-5	60 per Box
				Standard USB-A to Mini-B Assembly, 12″	305	1496476-6	200 per Box
				Standard USB-A to Mini-B Assembly, 8″	203	1496476-8	10 per Box
				C2113A USB Cable	800	1750516-1	200 per Box

All specifications subject to change. Consult Tyco Electronics for latest specifications.

Mini USB Receptacle

Features

Tyco Electronics offers a complete range of (Mini) USB receptacles, cables and plugs.

The system is fully compliant with the USB specification and supports data transmission speeds >USB 2.0 full speed.

Material and Finish

Housing:
High temperature thermoplastic, UL 94 V-0, black color

Contact:
Phosphor bronze, selectively plated gold over nickel and tin-lead in solder area

Shell:
Phosphor bronze, half bright tin over copper underplating

Documentation

Drawing:
C-See table

Product Specification:
108-57062

Test Report:
501-57070

Mini USB Receptacles, Type B

No. of Contacts	Color	Description	Locating Post	P & P Tape	Part Number	Package Quantity (Pieces)
4	Black	Mini USB, Receptacle	Y	N	1775055-1	700 per Reel
5	Black	Mini USB, Right-Angle, SMT, pbFree	Y	N	1734035-1	150 per Tray
					1734035-3	700 per Reel
			Y	Y	1734035-4	700 per Reel
			N	N	1-1734035-1	150 per Tray
					1-1734035-3	700 per Reel

Micro USB Connector

Features and Advantages

The brand new Micro USB connector further decreases the size needed for the popular USB connector system, while maintaining performance on the same level. It is specifically developped for mobile phone applications where size is a major issue.

- Low profile connector system; Height = 2.7 mm (2.7 x 5.0 x 7.5 mm)
- Robust design
- 10,000 cxycles durability
- Latching design provides strong mating

Material and Finish

Insulator:
Thermoplastic resin

Contact Pin:
Copper alloy

Contact Plating:
Selectively gold plated over Ni-Pd over nickel

Shell:
Stainless steel, tin over nickel plated

Documentation

Drawing:
C-See table

Product Specification:
108-78434

Test Report:
See Product Specification

No. of Conductors	Type	Color	Description	Part Number	Package Quantity (Pieces)
5	Receptacle	Gray	Receptacle AB	1981584-1	1000
		Black	Receptacle B	1981568-1	1000
	Plug	White	Plug A Type	1939053-1	1000
		Black	Plug B Type	1939054-1	1000

All specifications subject to change. Consult Tyco Electronics for latest specifications.

Generic Snake and Pad Connector

Features

The Snake and Pad contact system is a spring loaded approach to the I/O connector. Inherently the system is very forgiving of large mating tolerances and boasts a low total application cost. Using this proven contact system Tyco Electronics has 12 and 16 pos. standard connectors available.

The connector system uses solderless compression in-phone "pad" and cradle cable plug "snake" contacts. The plug consists of full load cradle and cable connectors as well as charging plugs. The connector system can be keyed for individual customer applications. Tyco Electronics Snake and Pad connectors are highly reliable cellular interconnect solutions, used in millions of handsets.

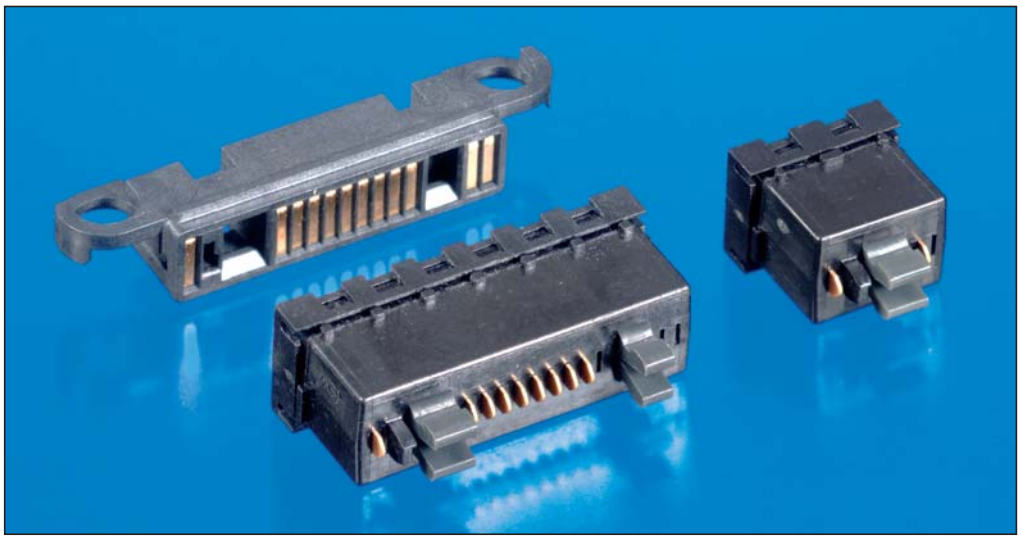

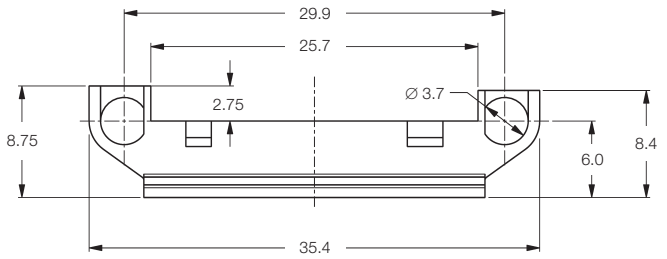

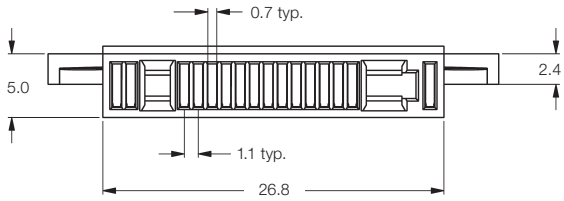

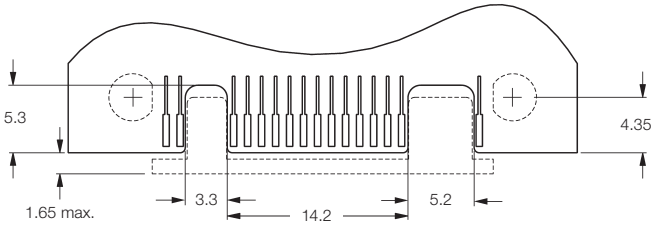

Material and Finish

Insulator:
LCP, glass-filled, black color

Contact Pin:
Phosphor bronze

Contact Plating:
Selectively plated gold over nickel at contact position, tin over nickel at solder area

Locking Springs:
POM, black color

Documentation

Drawing:
C-See table

Product Specification:
108-19184

Test Report:
501-19044

Application Specification:
114-19060

						Mates with				
						5338980	5338979	5338982	338966	338967
Part Number	Package Quantity (Pieces)	No. of Pos.	Type	Application	PCB Thickness (mm)	2 Pos.	12 Pos.	16 Pos.	12 Pos.	16 Pos.
5338980-1	2250 per Box	2	Plug	Cable	–	–	–	–	X	X
5338979-1	2250 per Box	12	Plug	Desktop Stand	–	–	–	–	X	–
5338979-2	2250 per Box	12	Plug	Cable	–	–	–	–	X	–
5338982-1	1750 per Box	16	Plug	Desktop Stand	–	–	–	–	–	X
5338982-2	1750 per Box	16	Plug	Cable	–	–	–	–	–	X
338966-9	250 per Box	12	Receptacle	N/A	0.9*	X	X	–	–	–
1-338967-2	250 per Box	16	Receptacle	N/A	1.2*	X	–	X	–	–

*) Other PCB thickness can be made available upon request.

Multi Media Interface Connector

Features

This small versatile Multi Media Interface Connector supports various digital data/audio applications.

Proprietary metal shell side lock provides superb EMI performance as well as mechanical robustness.

Various cable assemblies are provided to support many mobile electronics applications.

Material and Finish

Insulator:
Thermoplastic, UL 94 V-0, black color

Contact Pin:
Copper alloy

Contact Plating:
1.0 µm min. nickel underlayer,
0.1 µm min. gold at mating side,
0.01–0.2 µm gold at solder tin

Shell Plating:
0.5 µm min. tin plating

Documentation

Drawing:
See table

Product Specification:
See table

Test Report:
See table

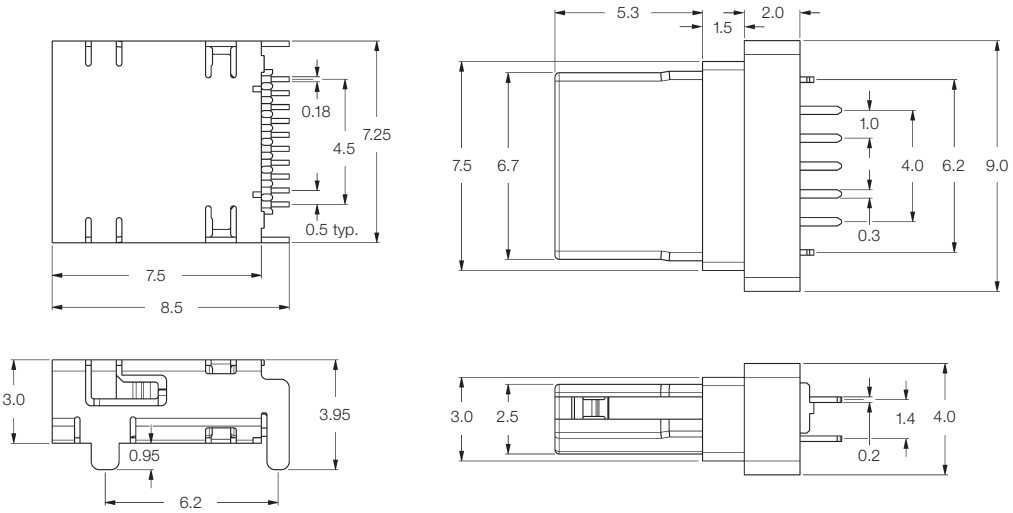

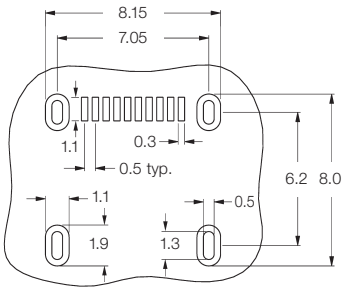

PCB Layout
(for reference only)

MMI Connectors

Pitch	No. of Pos.	Type	Height (mm)	Style	Description	Part Number	Package Quantity (Pieces)	Comment
0.5	10	Plug	N/A	N/A	Plug Assy for Ear Phone Connector	1612633-1	150 per Tray	–
		Receptacle	3.0	DIP	Receptacle Assemby for Ear Phone	1612634-1	1500 per Reel	–
			3.0	SMT	Receptacle Assy for Ear Phone Jack Connector	1674432-1	1200 per Reel	–
			3.2	DIP	Rec. Assy for Ear Phone Connector onboard reverse	1827349-1	1500 per Reel	Reversed
			1.4	DIP	Receptacle Assy for Ear Phone Connector off	1674787-1	1500 per Reel	Inboard
			2.4	DIP	Receptacle Assy for Ear Phone Connector off	1747124-1	1200 per Reel	Inboard
			2.4	DIP	Receptacle Assy for Ear Phone Connector off	1746223-1	1500 per Reel	Inboard, reversed
	12	Plug	N/A	N/A	Plug Assy for MMIC	1746717-1	110 per Tray	–
		Receptacle	3.0	SMT	Receptacle Assy for MMIC	1746716-1	600 per Reel	–
	14	Plug	N/A	N/A	Plug Assy for DC Cable	1717169-1	110 per Tray	–
		Receptacle	3.0	DIP	Emboss Assy for MMIC Receptacle	1717312-1	600 per Reel	–

All specifications subject to change. Consult Tyco Electronics for latest specifications.

MDIC and S-MDIC Connector System, 12 Positions

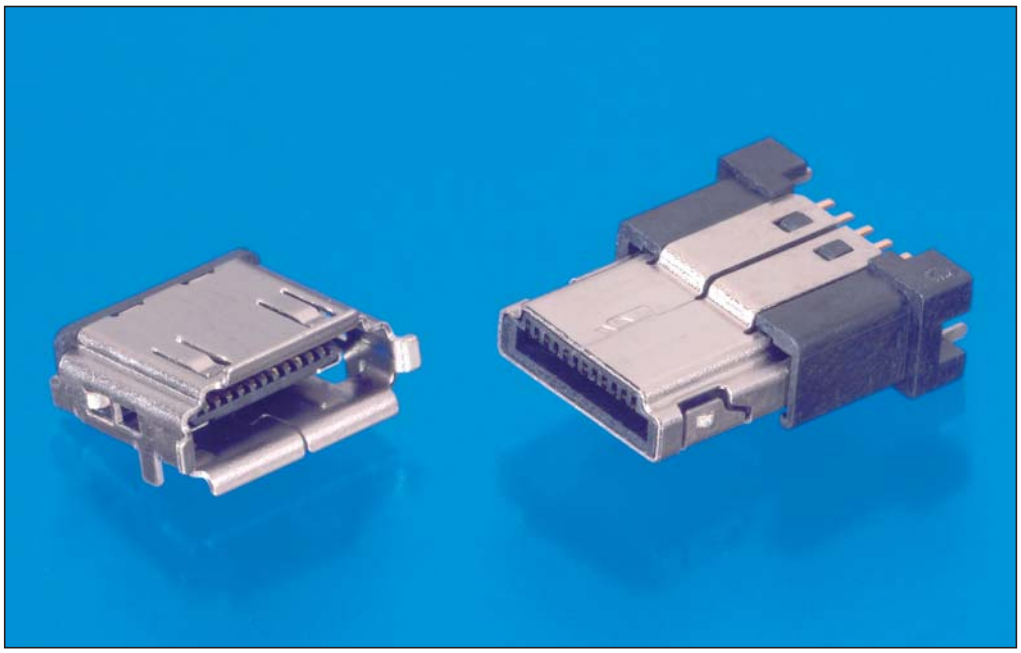

Features

The MDIC and S-MDIC I/O connector systems are further decreasing the size of common I/O interfaces.

This 12 positions connector system is highly miniaturized and features a receptacle height as small as 2.0 mm.

Small Size (L x W x H):
6.0 x 7.2 x 2.5 mm (S-MDIC)
7.15 x 8.7 x 2.0 mm (MDIC)

Packaged in Tape and Reel

Material and Finish

Insulator:
Thermoplastic acc. UL 94 V-0

Contacts:
Copper alloy 0.3 µm gold over 1.3 µm nickel in contact area. Gold-flash in other areas.

Shell:
SUS nickel plated 2.0 µm min.

Receptacle

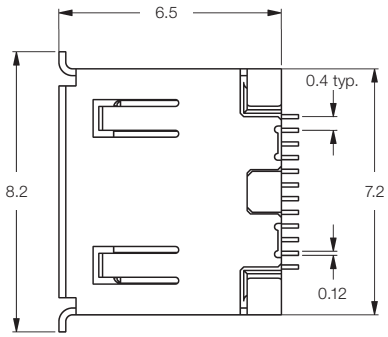

Plug

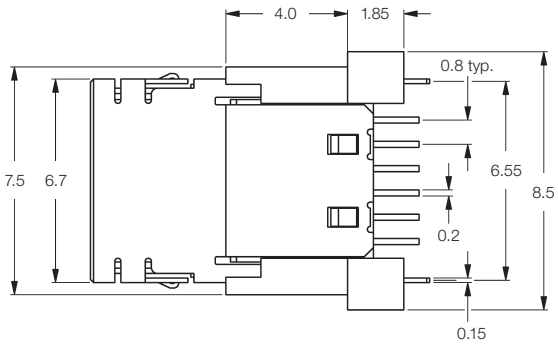

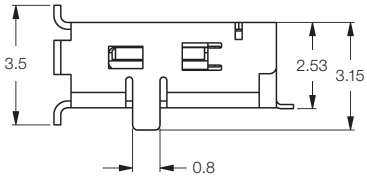

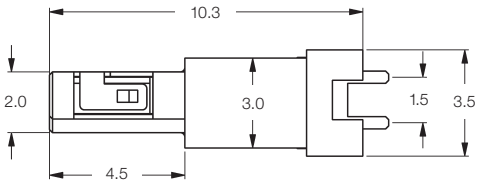

S-MDIC as shown

Description	Pitch (mm)	Height (mm)	Part Number	Package Quantity
S-MDIC Receptacle	0.4	2.5	368560-1	1000 per Reel
S-MDIC Receptacle, Reversed	0.4	2.5	368565-1	1000 per Reel
S-MDIC Plug	0.4	N/A	368555-1	750 per Tray
MDIC Receptacle	0.5	2.0	1827541-1	1000 per Reel
MDIC Plug	0.5	N/A	1827546-1	110 per Tray

HDMI Connectors, Type C

Features

New reduced form factor connector for small portable devices such as camcorders, still cameras and mobile phones.

Compliant with HDMI version 1.3 specification.

These HDMI connectors are on the approved connector list.

Material and Finish

Insulator:
Thermoplastic acc. UL 94 V-0, color black

Contact:
Copper alloy

Shell:
Copper alloy

Pick and Place Feature:
Polyamide tape

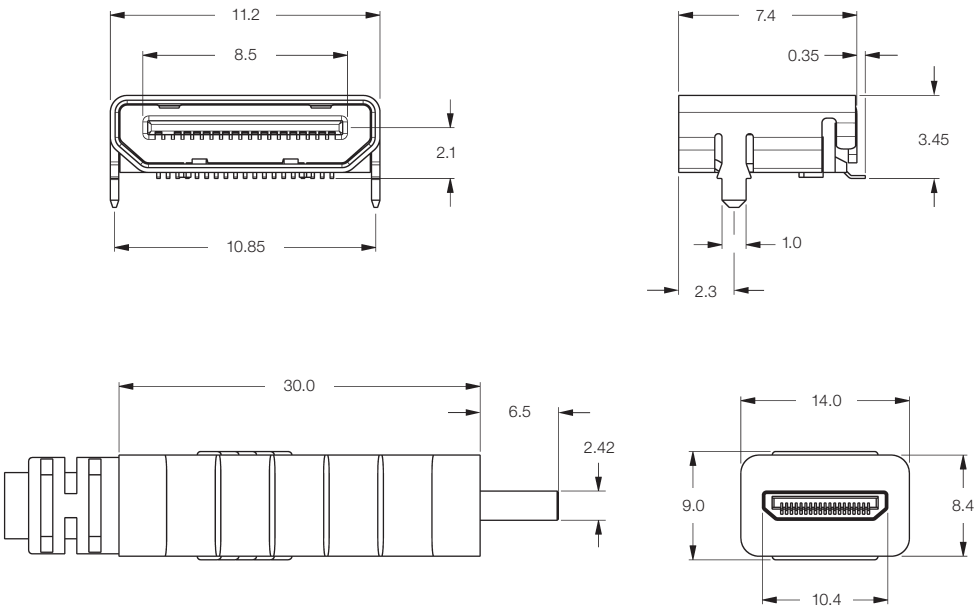

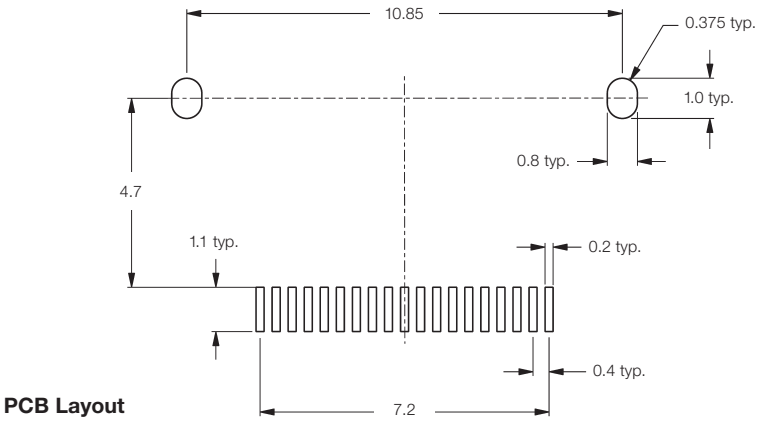

PCB Layout

All specifications subject to change. Consult Tyco Electronics for latest specifications.

Memory Card Connectors

Features

Tyco Electronics offers a wide range of memory card connectors in several variations.

Material and Finish:

See drawing

Documentation

Drawing:
See table

Product Specification:
See table

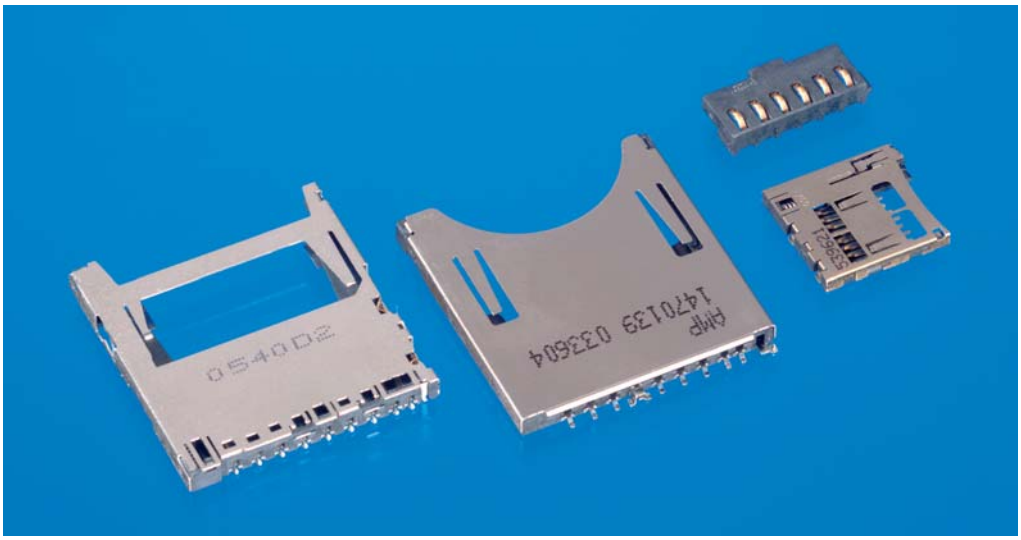

Type	Part Number	Package Quantity (Pieces)	Ejection Type	Card Detection Switch	Write Protect Switch	Standoff	Height Location Pin (mm)	Packaging	Product Specification
SD	1470139-1	40 per Tray	P-P	Y	Y	0	0.70	Long Tray	108-57127
	1470139-2	32 per Tray	P-P	Y	Y	0	0.70	Short Tray	108-57127
	1470139-3	300 per Reel	P-P	Y	Y	0	0.70	T&R	108-57127
	1734234-1	45 per Tray	P-PI	Y	Y	0	0.85	Tray	108-57127
	1734234-2	500 per Reel	P-PI	Y	Y	0	0.85	T&R	108-57127
	1734234-3	45 per Tray	P-PI	Y	Y	0	0.40	Tray	108-57127
	1734234-4	500 per Reel	P-PI	Y	Y	0	0.40	T&R	108-57127
	1734472-1	40 per Tray	P-P	Y	Y	0	0.70	Long Tray	108-57127
	1734472-2	32 per Tray	P-P	Y	Y	0	0.70	Short Tray	108-57127
	1734472-3	300 per Reel	P-P	Y	Y	0	0.70	T&R	108-57127
	1-1734472-1*	40 per Tray	P-P	Y	Y	0	0.70	Long Tray	108-57127
	1-1734472-2*	32 per Tray	P-P	Y	Y	0	0.70	Short Tray	108-57127
	1-1734472-3*	300 per Reel	P-P	Y	Y	0	0.70	T&R	108-57127
	1871250-3	220 per Reel	P-P	Y	Y	0	0.55	T&R	108-78220
	1871250-4	220 per Reel	P-P	Y	Y	0	0	T&R	108-78220
	1871583-1**	280 per Reel	P-P	Y	Y	0	0.55	T&R	108-78220
	1871583-2**	281 per Reel	P-P	Y	Y	0	0	T&R	108-78220
	1871583-3	282 per Reel	P-P	Y	Y	0	0.55	T&R	108-78220
	1871583-4	283 per Reel	P-P	Y	Y	0	0	T&R	108-78220
	440297-1	48 per Tray	P-P	Y	Y	0	0.85	Tray	108-57127
	440297-2	500 per Reel	P-P	Y	Y	0	0.85	T&R	108-57127
	440297-3	48 per Tray	P-P	Y	Y	0	0.45	Tray	108-57127
	440297-4	500 per Reel	P-P	Y	Y	0	0.45	T&R	108-57127
SD Reverse	1775059-1	250 per Reel	P-P	Y	Y	0	0.50	T&R	108-57504
	1775012-1	250 per Reel	P-P	Y	Y	1.2	0.50	T&R	108-57504
	1775067-1	250 per Reel	P-P	Y	Y	0	0.50	T&R	108-57504
	1871916-1	200 per Reel	P-P	Y	Y	0	0.45	T&R	–
	1903302-1	180 per Reel	P-P	Y	Y	0	0.45	T&R	–
Memory Stick	1674162-1	45 per Tray	P-P	Y	N	0	0.80	Tray	108-5734
	1674319-1	54 per Tray	P-P	N	N	0	0	Tray	108-5734
	1470332-1	72 per Tray	P-PI	N	N	0	0.60	Tray	108-57238
	1717431-1	54 per Tray	P-P	N	N	0	0	Tray	108-5734
XD	1470864-1	50 per Tray	P-PI	N	N	0	0.45	Tray	108-57432
T-Flash	1827034-1	1100 per Reel	P-P	N	N/A	0	0	T&R	108-78224
Mini SD	1775204-1	750 per Reel	P-P	Y	N/A	0	0.5	T&R	108-57589
Micro SD	1871602-1	1000 per Reel	P-P	Y	N/A	0	0	T&R	108-78337
	1871602-2	1000 per Reel	P-P	Y	N/A	0	0.45	T&R	108-78337
MMC	338610-1	1350 per Reel	P-PI	N	N/A	0	0	T&R	108-19173

*) Full cover **) Reversed reflow possible

Micro SD Connector

Features

The Micro SD socket has an easy-to-use push-push connection. It is equipped with a mechanism we created in-house that maintains sufficient card ejection stroke while preventing the card from popping out. Also, it provides high reliability in a compact low profile shape with a durable card detection switch built-in and it holds contact securely. The Micro SD/SD adapter achieves long-lasting high operability by using an internal construction that prevents flexing and other stresses on the case from being conveyed to contacts.

Micro SD Socket

- Excellent insertion click
- Rugged connectivity maintains connections
- Supports embossed packaging

Micro SD/SD Adapter

- Hook spring mechanism makes clear click connection
- Comes with socket
- Any label design modification is possible
- Equipped with write protect key

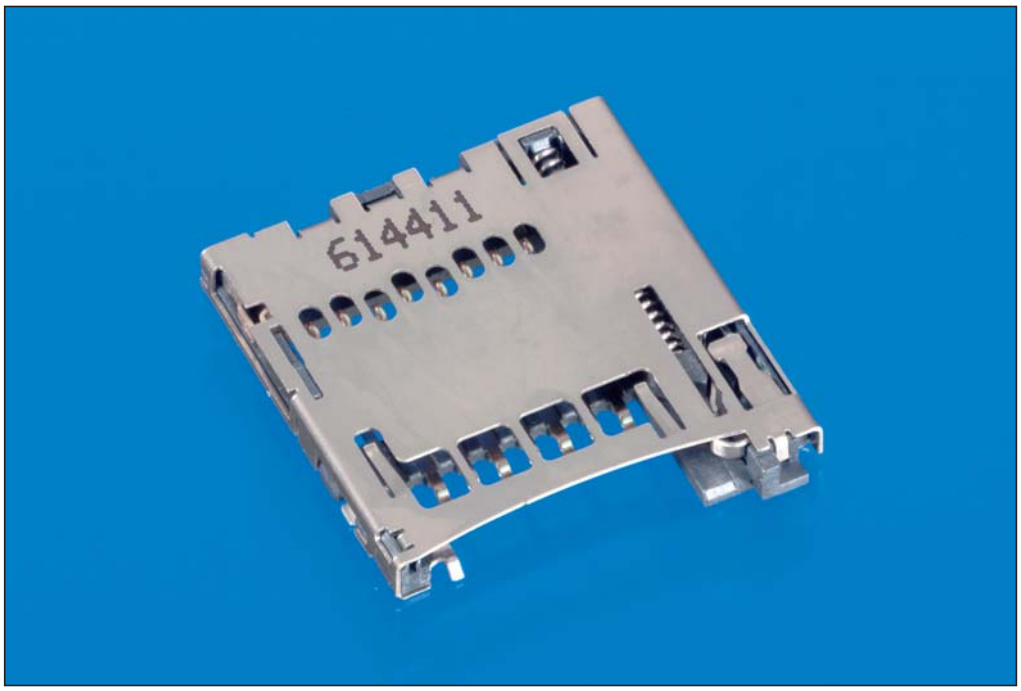

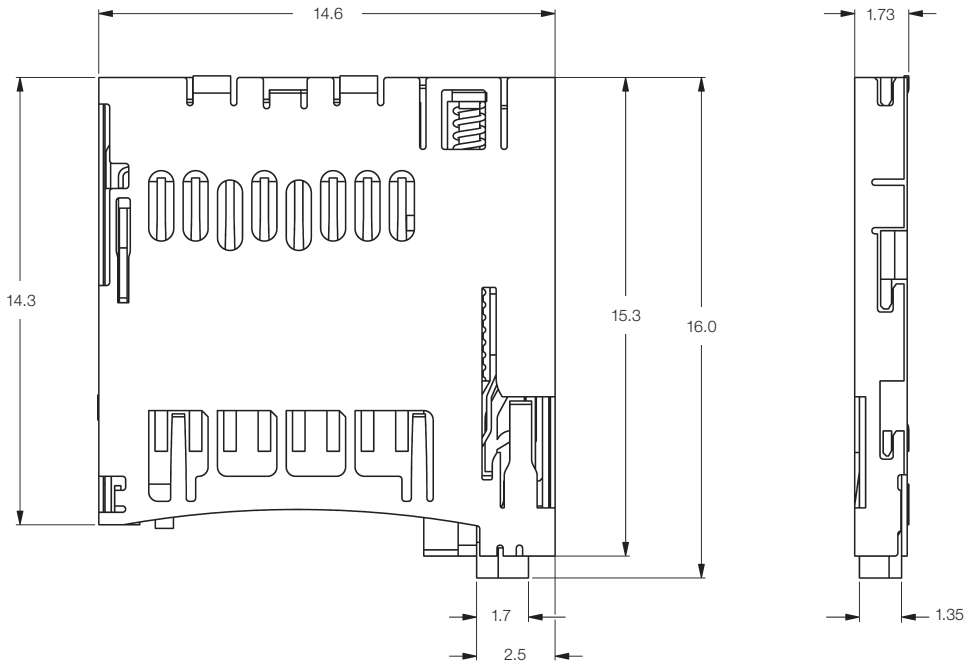

Part No. **1871602-1** without Locating Pin
Part No. **1871602-2** with Locating Pin

Material and Finish

Insulator:
Thermoplastic, black color

Contact:
Copper alloy, gold over nickel plated

Shell:
Copper alloy, gold over nickel plated

Coil:
SWP

Cam Rod:
SUS

Hook Spring:
SUS

Documentation

Drawing:
C-1871602

Product Specification:
108-78337

Test Report:
501-5756

All specifications subject to change. Consult Tyco Electronics for latest specifications.

Micro SD/SIM Combi Connector

Features

This connector combines a Micro SD memory slot with a SIM card connector on top of it. Besides of the enormous space savings this brings, the connector also includes features like shielding test points and of course push-push ejection system and a card detection switch.

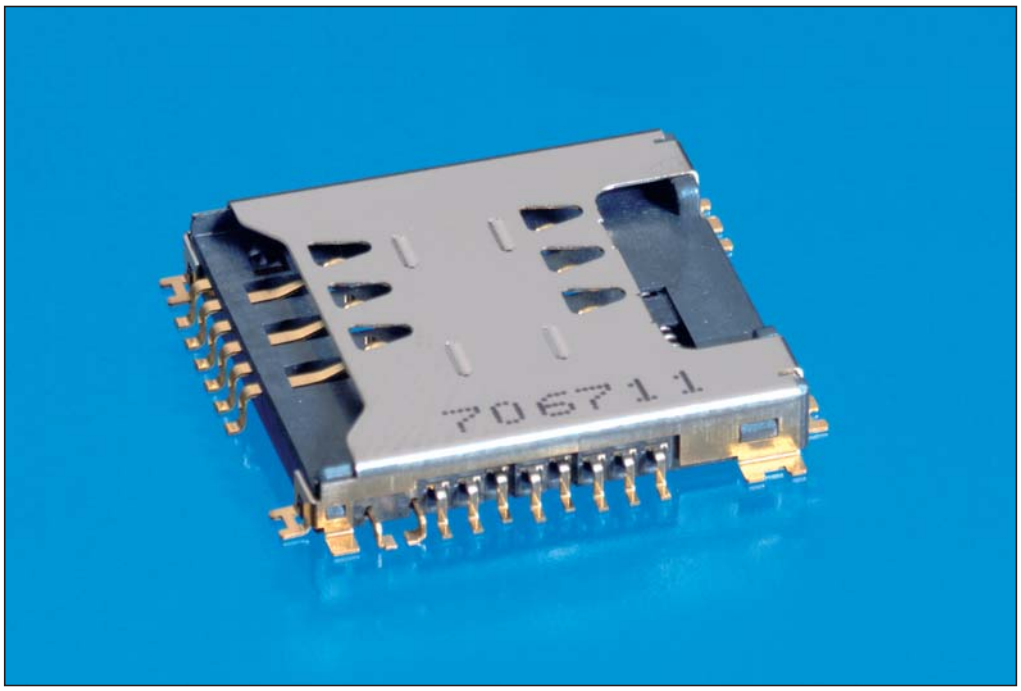

Material and Finish

SIM Contact:
Copper alloy, plated gold over nickel

Insulator:
Thermoplastic, black color

Micro SD Contact:
Copper alloy, plated gold over nickel

Switch Contacts:
Copper alloy plated gold over nickel

Cam Slider:
Thermoplastic, black color

Cam Hook Spring:
Stainless steel

Camrod:
Stainless steel

Coil Spring:
Piano wire nickel plated

Bottom Shell:
Copper alloy, nickel plated

Top Shell:
Copper alloy, gold over nickel plated

Documentation

Drawing:
C-368637

Product Specification:
108-61079

Test Report:
501-61050

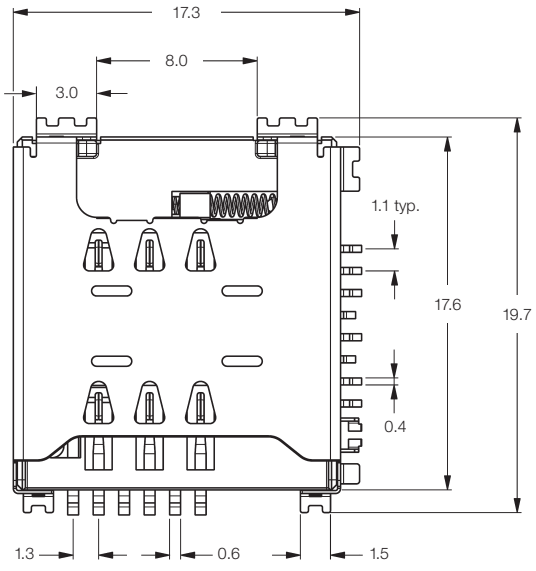

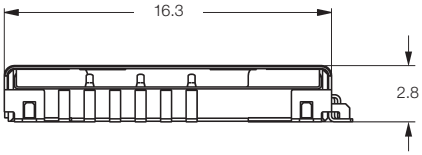

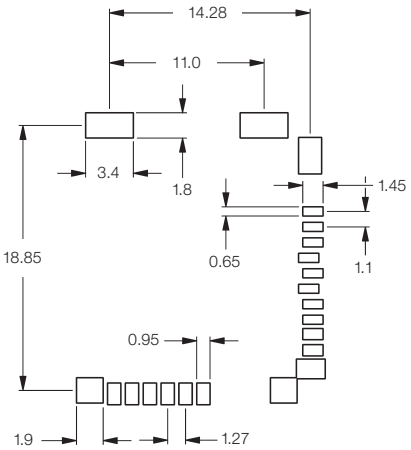

PCB Layout

Part No. **368637-3**

Package Quantity:
600 Pieces per Reel

Micro SD Adapter

Features

This adapter allows the Micro SD card to be read in a normal SD card slot. The adapter is equipped with a spring which provides required retention force for the Micro SD card.

Custom labeling can be provided on demand.

Material and Finish

Insulators:
Thermoplastic

Contacts:
Copper alloy selective gold plated

Spring:
Stainless steel

Label:
PET

Documentation

Drawing:
C-1903290

Product Specification:
108-78355

Description	Part Number	Package Quantity
Micro SD Adapter with Soft Case	1903290-1	60 Tray

All specifications subject to change. Consult Tyco Electronics for latest specifications.

Spring Probe Connector (SPC), 1 Position

Features

Spring Probe Connectors require very small space on printed circuit board.

Spring Probe Connectors can be used for battery connections as well as antenna, shielding and many other applications.

A wide variety of pin count, size, and soldering interfaces are available.

Please contact your sales for more details.

Material and Finish

Plunger:
Brass

Body:
Brass

Spring:
Piano wire

Contact Plating:
Nickel underlayer,
0.1 µm min. gold plating

Height / Length (mm)					Force (N)			Force (N)	
Body Height	Max. Compression Height	Working Height	Min. Compression Height	Un-compressed Height	Min. Force	Nominal Force	Max. Force	Min. Diameter	Max. Diameter
6.26	6.26	6.76	7.26	7.76	0.3	0.8 +/- 0.2	2	1.5	1.9
3.10	3.20	3.60	4.00	4.20	0.3	0.8 +.6 -0.2	–	1.5	1.9
6.10	6.20	6.60	7.10	7.60	0.5	0.9 +/-0.3	–	1.5	1.8
5.13	5.68	6.08	6.70	6.88	0.3	N/A	1.3	1.5	2.3
5.00	5.10	5.45	6.00	6.50	0.3	0.9 +/- 0.3	–	1.5	1.8
7.60	7.75	8.15	8.65	9.15	0.3	0.9 +/- 0.3	–	1.5	1.8
7.30	7.40	7.80	8.30	8.80	0.3	0.9 +/- 0.4	–	1.5	1.8
4.90	–	5.47	–	6.10	N/A	1	–	1.175	1.175
7.35	7.90	8.40	8.90	9.40	0.6	N/A	1.8	1.5	2.65

Spring Fingers

Features

Spring Fingers provides highly reliable connection in many applications such as shielding, cconnection to vibration motors, antennas, speakers and micro-phones.

Our large portfolio contains products with several mating heights and plating variants.

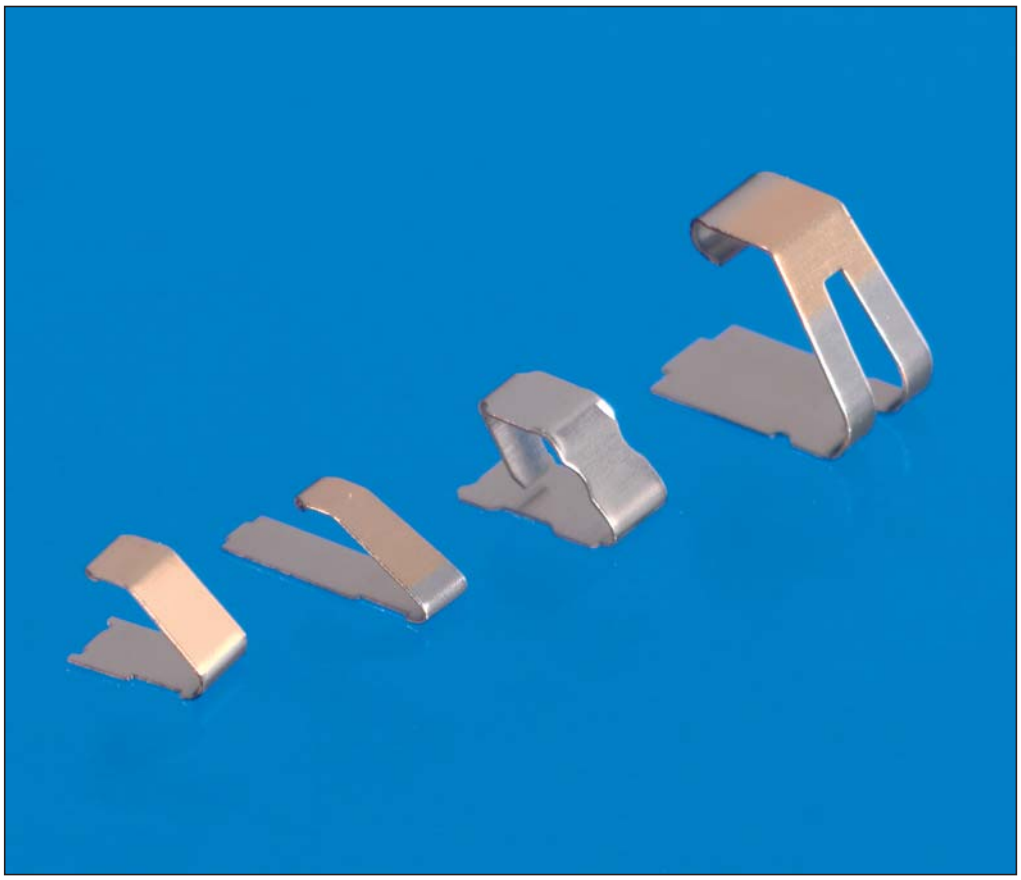

Material and Finish

Contact Pin:
Copper alloy

Contact Plating:
See table

Documentation:

Drawing:
See table

Product Specification:
See table

Test Report:
See table

Description	Part Number	Package Quantity (Pieces)	Width (mm)	Uncompressed Height (mm)	Effective Height (mm)	Base Material	Plating Solder Area	Plating Contact Area	Product Specification	Test Report
820	1447009-5	5000 per Reel	2.0	0.8	0.3–0.5	Cu Alloy	Au	Au	108-78123	501-78113
915	1483748-1	5000 per Reel	1.5	0.8	0.6–0.3	Cu Alloy	Au	Au	–	–
1312	1447009-6	5000 per Reel	1.2	1.3	0.7–1.0	Cu Alloy	Au	Au	108-78135	501-78123
1410	1-1447360-1	5000 per Reel	1.0	1.4	1.05–1.3	Cu Alloy	Au	Au	108-78174	501-78159
1511	1565158-1	5000 per Reel	1.1	1.5	0.95–1.3	Cu Alloy	Au	Au	108-5785	–
1520	1746136-1	5000 per Reel	2.0	1.5	0.6–1.0	BeCu	Au	Au	–	–
1608	1565322-1	5000 per Reel	0.8	1.6	1.1–1.4	Cu Alloy	Au	Au	108-5786	–
1715	1447360-9	5000 per Reel	1.5	1.7	0.9–1.3	Cu Alloy	Au	Au	108-78143	–
1895	1857724-4	5000 per Reel	0.95	1.8	1.5–1.0	Stainless Steel	Au	Au	–	–
3025 Z1-T	440432-1	2500 per Reel	2.5	3.0	1.0–2.5	Cu Alloy	Sn	Au	108-57169	501-57159
3025-Z1T2	1734300-1	2500 per Reel	2.5	3.0	0.8–3.0	Cu Alloy	Sn	Au	108-57507	501-57581
3525A	1447009-8	2000 per Reel	2.5	3.5	2.0–3.0	Cu Alloy	Au	Au	108-78162	501-78162
4025	1437259-6	2000 per Reel	2.5	4.0	2.0–3.5	Cu Alloy	Ni	Ni	108-78156	501-78141
404025C-T	1720028-2	2000 per Reel	2.5	4.0	0.8–3.2	Cu Alloy	Sn	Sn	108-57507	501-57581
5025T	440423-1	1500 per Reel	2.5	5.0	2.0–4.0	Cu Alloy	Au	Au	–	–
6525	440430-1	1200 per Reel	2.5	6.5	4.0–6.5	Cu Alloy	Sn	Au	108-57130	501-57110

All specifications subject to change. Consult Tyco Electronics for latest specifications.

LCD ITO Connector, 8 Positions

Features

8 positions ITO connector for chip on glass technology. The connector is being glued to the LCD, using an anisotropic conductive film. The compressive part of the connector is used for contacting the PCB.

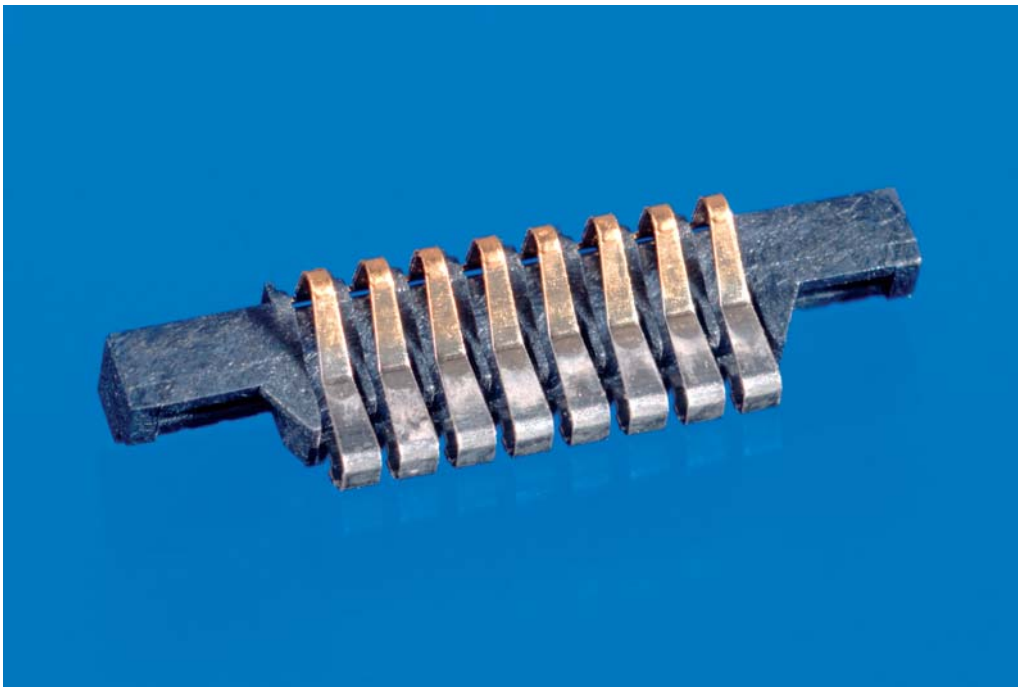

Material and Finish

Insulator:
Thermoplastic resin, black color

Contact Pin:
Copper alloy

Contact Plating:
0.25 µm gold min. over
1.3 µm nickel in contact zones.

Documentation

Drawing:
C-338970

Product Specification:
108-19189

Test Report:
501-19047

Application Specification:
114-19061

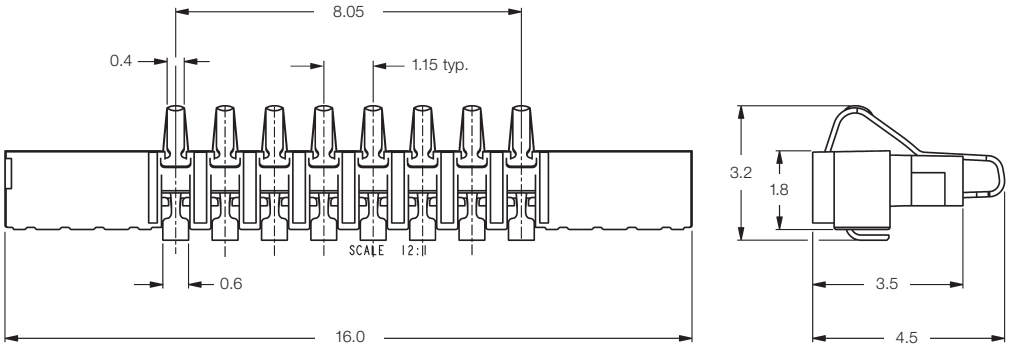

Part No. **338970-1**

Package Quantity:
1300 Pieces per Reel

LCD Connector 0.65 mm, 10 Positions

Features

The connector is SMD soldered to the main board and provides a stable and reliable connection by compressive contacts with the LCD module.

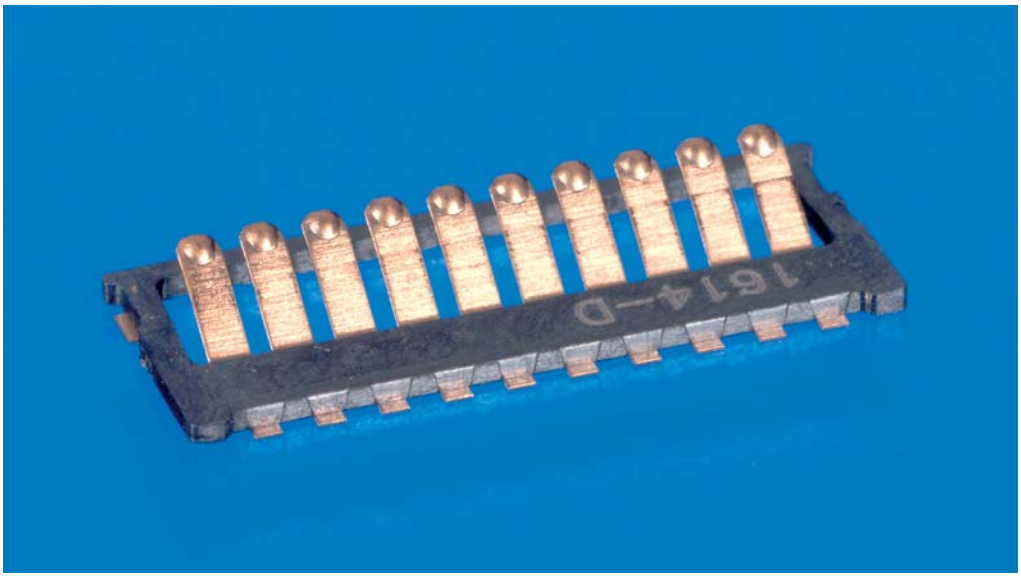

Material and Finish

Insulator:
Glass-reinforced LCP, black color

Contact Pin:
BeCu Copper alloy

Bracket:
BeCu Copper alloy

Contact Plating:
0.5 µm gold min. over 1.3 µm nickel in contact zone. Other area's flash gold over 1.3 µm nickel.

Documentation

Drawing:
C-1705536

Product Specification:
108-19269

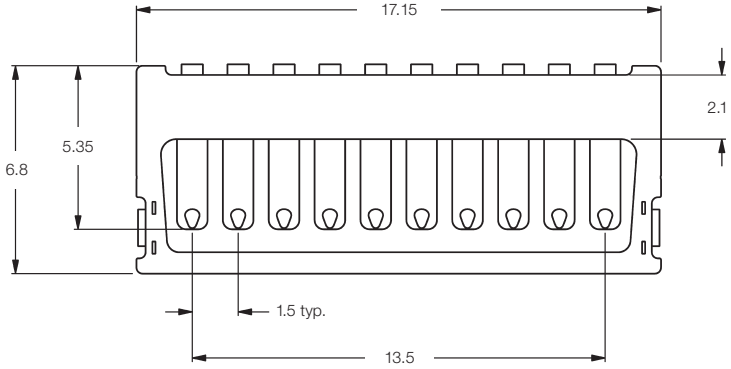

Part No. **1705536-2**

Package Quantity:
1900 Pieces per Reel

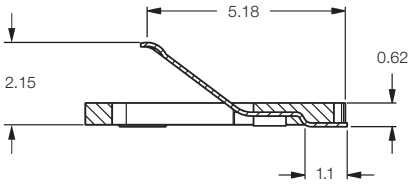

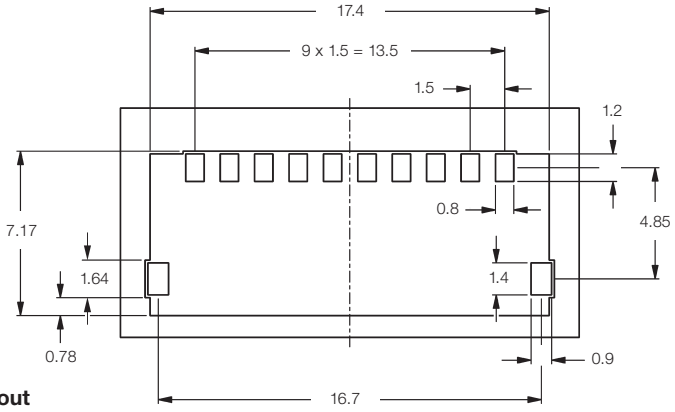

PCB Layout

All specifications subject to change. Consult Tyco Electronics for latest specifications.

Standard Switching Coax

Features

These switching coax connectors are used for testing and setting the power of the phone on the production lines but also to make external switched connection in a car kit application to use an external antenna.

The deep drawn outer shell allows a misalignment tolerance capture up to 1.0 mm in all direction.

This system allows up to 20.000 mating/switching cycles.

3 different height available: 6.0 mm, 4.5 mm and 3.5 mm (only 0.5 mm tolerance capture).

Coplanarity: 0.1 mm

Material and Finish

Dielectric:
PEEK, natural color

Outer Shell:
Steel gold plated

Switch Contacts:
Stainless steel, selective plated

Center Pin:
Brass, gold plated

Documentation

Drawing:
C-619061, C-61062 and 619072

Product Specification:
108-71000

Test Report:
501-19028

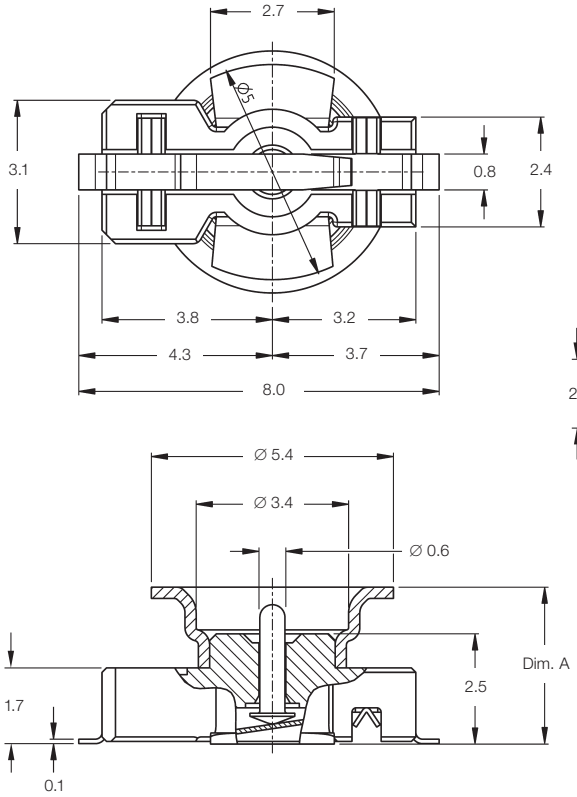

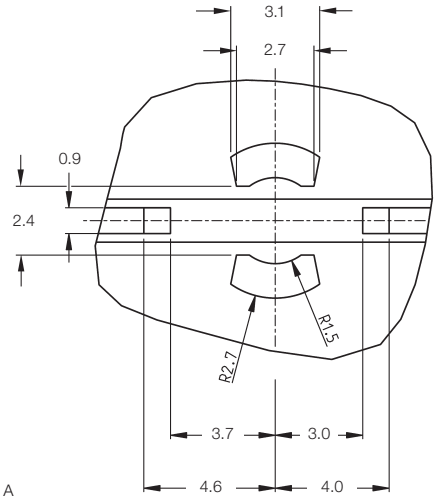

Recommended PCB Layout

Dimension A (mm)	Part Number	Package Quantity (Pieces)
6.0	619061-1	1200 per Reel
4.5	619062-1	1600 per Reel
3.5	619072-1	1600 per Reel

Standard Switching Coax Test Adapters

Features

Test adapters are used in Test Jigs on mobile phone production lines to connect smoothly to the PCB Jack switch.

This system allows a minimum of 100,000 cycles mating cycles.

Applicable up to 3 GHz.

Material and Finish

Dielectric:
PTFE

Outer Shell:
CuBe or similar, gold plated

Center Contact:
CuBe or similar, gold plated

Documentation

Drawing:
C-619052, C-619068

Product Specification:
108-71000

Test Report:
501-19028

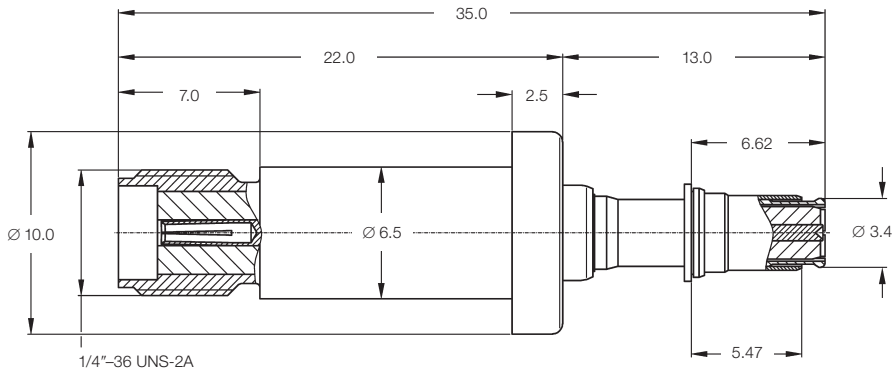

Part No. **619052-1**

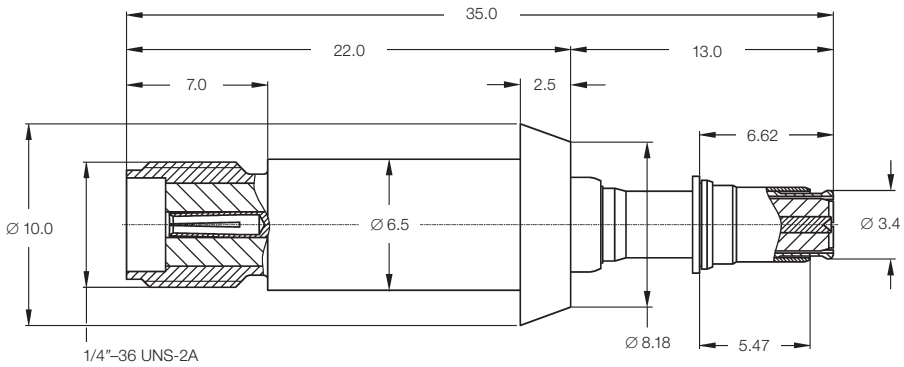

Part No. **619052-1**

All specifications subject to change. Consult Tyco Electronics for latest specifications.

Standard Switching Coax Right-Angle Cable Plug

Features

Right-Angle cable plugs are used mainly for car kit application but can also be used in test jigs instead of test adapters.

The integrated floating system allows smooth connection, able to capture tolerances up to 1.0 mm misalignment between phone and car kit with any risk of damaging the mobile phone.

A minimum of 20,000 mating cycles can be done with this system.

Various form and length can be offered.

Cable to be used: RG 174, RG 316.

Material and Finish

Dielectric:
PEEK

Outer Shell:
CuBe or similar, gold plated

Center Contact:
CuBe or similar, gold plated

Documentation

Drawing:
C-619078, C-619028

Product Specification:
108-71000

Test Report:
501-19028

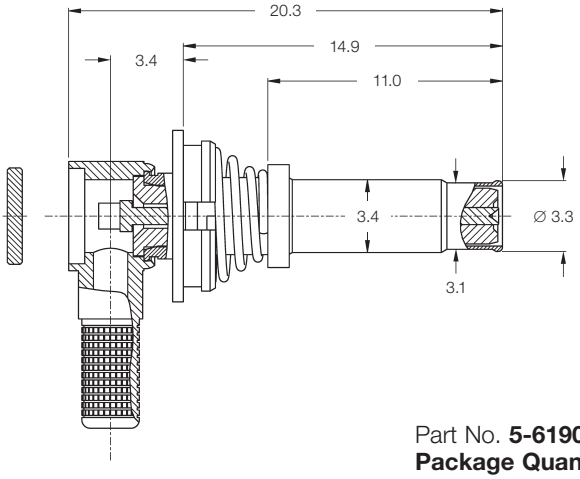

Part No. **5-619078-2**
Package Quantity: 500 Pieces

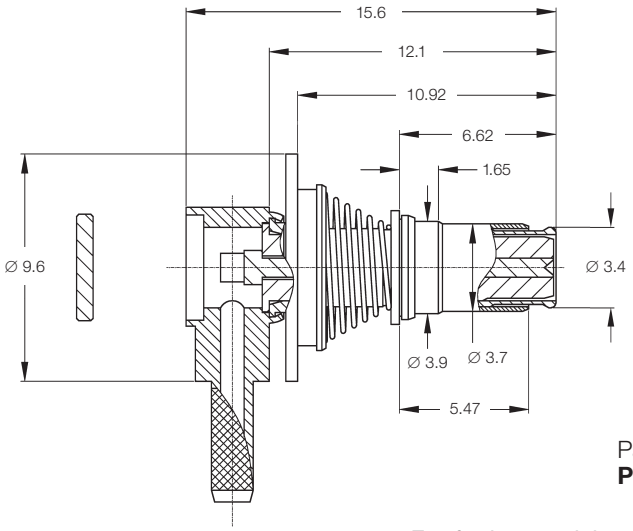

Part No. **5-619028-2**
Package Quantity: 500 Pieces

For further models, please contact Tyco Electronics

Standard Switching Coax with ESD Proctection

Features

These switching coax connectors are used for testing and setting the power of the phone on the production lines but also to make external switched connection in a car kit application to use an external antenna.

This 3 connector types offer in addition an ESD protection which means that as long as the PCB connector is not connected to a test connector or a cable connector, the center contact actuating the switch is grounded. The outer shell allows also a misalignment tolerance capture up to 1.0 mm in all direction.

This system allows up to 20.000 mating/switching cycles.

Two version available:
Height of 6.3 mm and 4.1 mm

Coplanarity: 0.1 mm

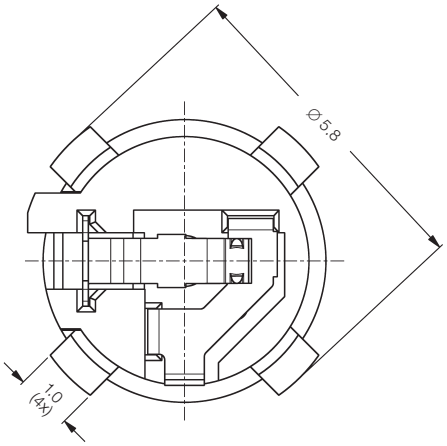

Recommended PCB Layout

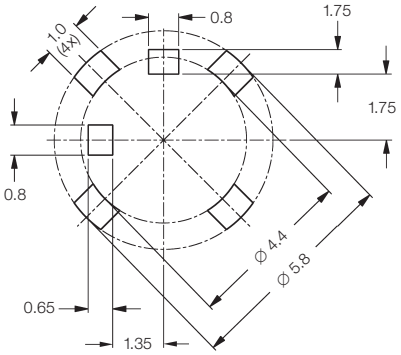

Material and Finish

Dielectric:
PEEK, natural color

Outer Shell:
Steel gold plated

Switch Contacts:
Stainless steel, selective plated

Center Pin:
Brass, gold plated

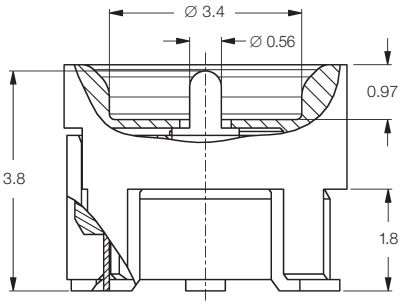

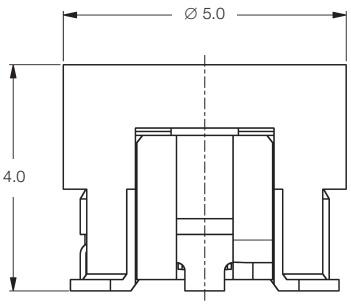

Documentation

Drawing:
C-619201 and 619231

Product Specification:
108-71053 and 108-71063

Height (mm)	Diameter (mm)	Part Number	Package Quantity (Pieces)	Comment
4.1	5.0	619201-1	1600 per Reel	–
		619231-1	1600 per Reel	In/Out 180° rotated

Test Adapters and Cable Plugs to be used for all Standard switching Coax with ESD protection:
Same as for Standard Switching Coax.

All specifications subject to change. Consult Tyco Electronics for latest specifications.

MID Micro Switching Coax

Features

This very small switching coax connector is used for testing and setting the power of the phone on the Mobile Phone production lines.

Applicable up to 6 GHz.

This connector using MID technology has only two components and allows a coplanarity value of max 0.08 mm.

PCB surf. need: 3.0 x 3.0 mm

Height: 2.5 mm

Two types of mating connector offered:
- Press-on for test jigs
- Snap-on for hand testing

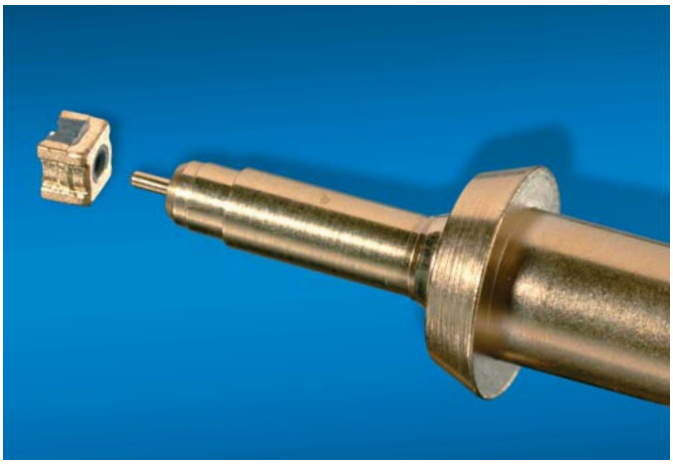

Material and Finish

Dielectric / Outer Shell / Second Signal Contact:
Two shot molded LCP selectively gold plated

Switch Contacts:
Stainless steel, gold plated

Documentation

Drawing:
C-619196, C-619210, C-619211

Product Specification:
108-71062

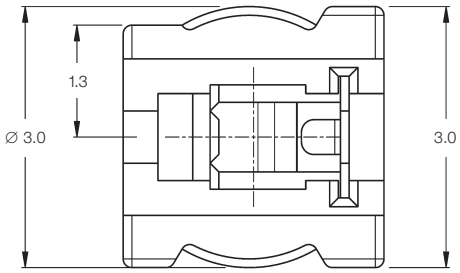

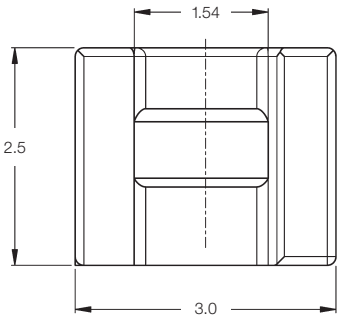

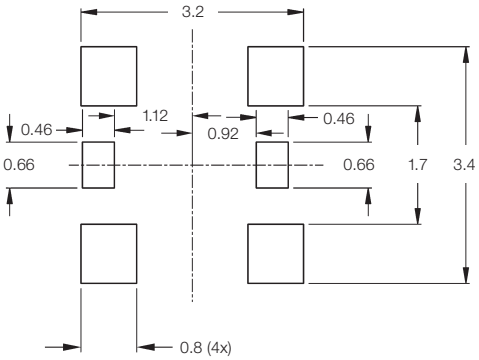

Recommended PCB Layout

SMD Switch: Part No. **619196-1**
Package Quantity: 1,000 Pieces per Reel

Right-Angle Cable Plug with Snap Fingers:
Part No. **5-619211-1**

Test Adapter: Part No. **619210-1**
Package Quantity: 50 Pieces per Box

MID Nano Switching Coax

Features

This very small switching coax connector is used for testing and setting the power of the phone on the Mobile Phone production lines.

Applicable up to 6 GHz.

This connector using MID tech nology has only two components. By having the switch contact mounted inside the connector, only the MID outer shell is touching the PCB. This allows remarkable coplanarity value of max. 0.06 mm.

PCB surf. need: 2.7 x 2.7 mm

Height: 1.7 mm

Two types of mating connector offered:
- Press-on for test jigs
- Snap-on for hand testing

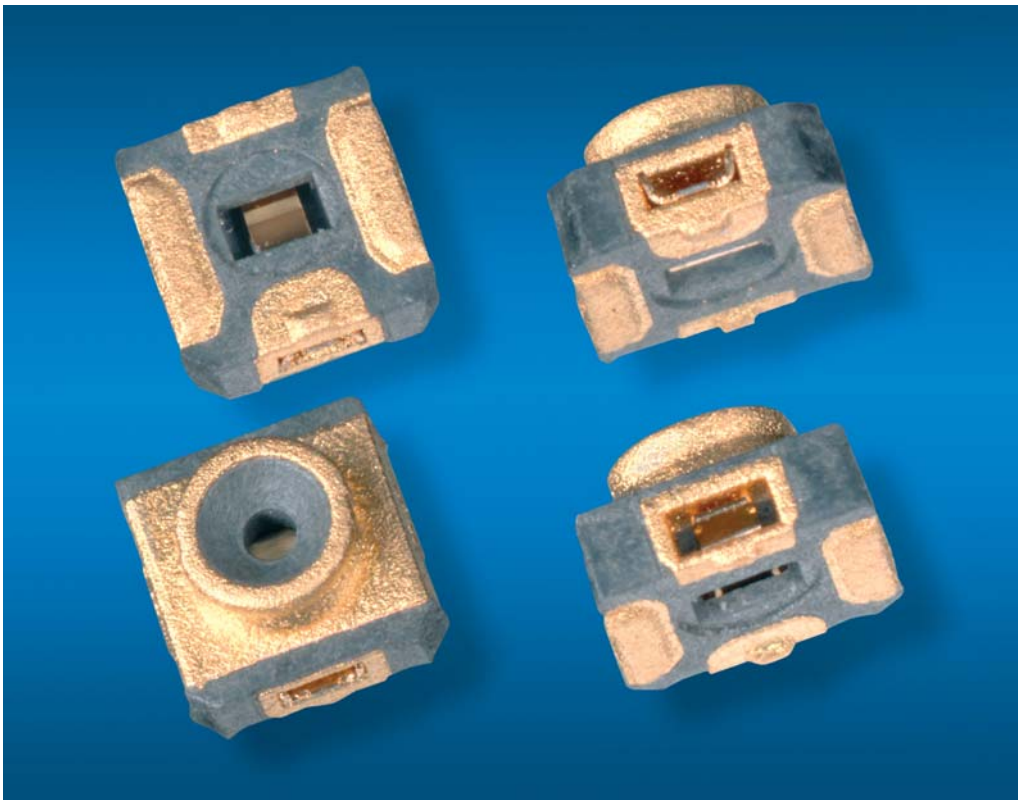

Material and Finish

Dielectric / Outer Shell / Second Signal Contact:
Two shot molded LCP selectively gold plated

Switch Contact:
Stainless steel, gold plated

Documentation

Drawing:
C-619213, C-619214, C-619217

Product Specification:
108-71065

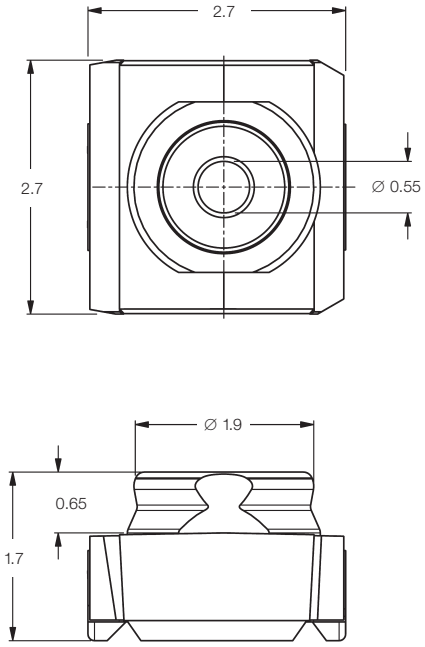

Recommended PCB Layout

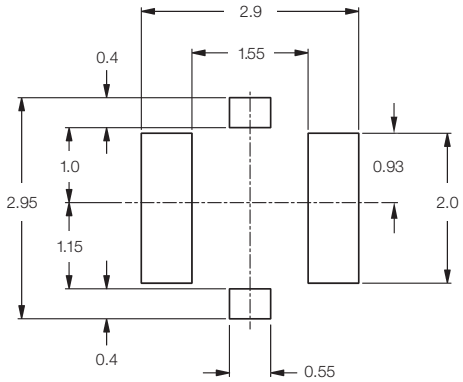

SMD Switch: Part No. **619213-1**
Package Quantity: 8,000 Pieces per Reel

Snap-On Test Adapter: Part No. **619217-1**
- Spring loaded center contact

Test Adapter: Part No. **619214-1**
- Spring loaded outer conductor
- Spring loaded center contact

All specifications subject to change. Consult Tyco Electronics for latest specifications.

Spring Probe Connector (SPC)

Features

Spring Probe Connectors are widely used in the electronics industry. In mobile equipment they can be used in several applications such as antenna, charging/power, shielding and many other applications.

Their proven design provides several advantages:

- Relatively large stroke
- Small Printed Circuit Board usage
- Spring action in only one direction (direction of movement)

The Tyco Electronics spring probe connector portfolio contains a vast variety of products with several heights, strokes, building styles (verticall or right-angle), pin counts and pitches.

Material and Finish

Insulator:
Thermoplastic, black color

Probe Pin:
Brass

Body:
Brass

Contact Plating:
Nickel underlayer, 0.1 µm min. gold plating

Documentation

Drawing:
See table

Product Specification:
See drawing

No. of Positions	Part Number	Package Quantity (Pieces)	Pitch	Contact Height (Free)	Stroke	Mating Type	Battery Mating
2	1746730-1	1000 per Reel	3.00	3.30	0.90	Vertical (180°)	Rotating (hinged)
	1746750-1	1500 per Reel	3.00	3.70	0.90	Vertical (180°)	Rotating (hinged)
	1279154-1	1000 per Reel	3.60	4.45	1.20	Vertical (180°)	Rotating (hinged)
	900971-1	1000 per Reel	4.00	5.00	1.40	Vertical (180°)	Rotating (hinged)
	1612681-1	1000 per Reel	3.60	5.00	1.40	Vertical (180°)	Rotating (hinged)
	900905-1	1000 per Reel	3.60	5.00	1.40	Vertical (180°)	Rotating (hinged)
	1746931-1	1000 per Reel	3.00	5.10	0.90	Vertical (180°)	Rotating (hinged)
	900795-1	1000 per Reel	4.00	5.70	1.50	Vertical (180°)	Rotating (hinged)
	900965-1	1000 per Reel	3.60	6.40	1.40	Vertical (180°)	Rotating (hinged)
	900712-1	1000 per Reel	3.00	6.90	1.50	Vertical (180°)	Rotating (hinged)
	1705254-1	2060 per Reel	3.10	2.80	2.30	Right-Angle (90°)	Sliding & hinged
3	1612493-1	1000 per Reel	3.00	3.95	1.40	Vertical (180°)	Rotating (hinged)
	1746751-1	1500 per Reel	3.00	5.50	1.50	Vertical (180°)	Rotating (hinged)
	1717400-1	1000 per Reel	4.00	6.30	1.40	Vertical (180°)	Rotating (hinged)
	1746116-1	1000 per Reel	4.60	6.35	1.25	Vertical (180°)	Rotating (hinged)
	1747103-1	1000 per Reel	3.45	4.15	1.70	Right-Angle (90°)	Sliding & hinged
	1717017-1	1000 per Reel	3.85	4.60	1.65	Right-Angle (90°)	Sliding & hinged
	1717257-1	1000 per Reel	3.50	3.95	1.40	Right-Angle (90°)	Sliding & hinged
	1717029-1	1000 per Reel	3.50	4.43	1.70	Right-Angle (90°)	Sliding & hinged
	1717294-1	1000 per Reel	2.60	4.75	1.60	Right-Angle (90°)	Sliding & hinged
4	1705130-1	1500 per Reel	2.50	5.00	1.50	Vertical (180°)	Rotating (hinged)
	1705030-1	1500 per Reel	2.54	3.60	1.00	Vertical (180°)	Rotating (hinged)
	1705795-1	1250 per Reel	2.54	5.60	1.50	Vertical (180°)	Rotating (hinged)
	900688-1	1000 per Reel	4.00	5.50	1.40	Vertical (180°)	Rotating (hinged)
	900988-1	1000 per Reel	4.00	5.50	1.50	Vertical (180°)	Rotating (hinged)
	1674783-1	1000 per Reel	4.00	5.70	1.50	Vertical (180°)	Rotating (hinged)
5	1483960-1	1500 per Reel	2.54	4.10	1.00	Vertical (180°)	Rotating (hinged)
	1377269-2	1500 per Reel	2.54	5.00	1.50	Vertical (180°)	Rotating (hinged)
	1674977-2	1500 per Reel	2.90	5.15	1.25	Vertical (180°)	Rotating (hinged)
	1483940-1	1500 per Reel	2.54	5.20	1.40	Vertical (180°)	Rotating (hinged)
	1674977-1	1400 per Reel	2.90	6.65	1.25	Vertical (180°)	Rotating (hinged)
	1717989-1	1000 per Reel	3.70	2.90	1.65	Right-Angle (90°)	Sliding & hinged
	1746773-1	1000 per Reel	3.50	3.65	1.70	Right-Angle (90°)	Sliding & hinged

Generic Battery Connector, 2 Positions

Features

Our Generic 2 positions SMT Battery Connector has an industry proven contact design that can be used in a wide variety of applications. Two contacts can be used for one pad for redundancy reasons.

Its small size and low cost make this connector ideal for low to medium volume requirements. This connector is also “in-line” stackable for multi position requirements.

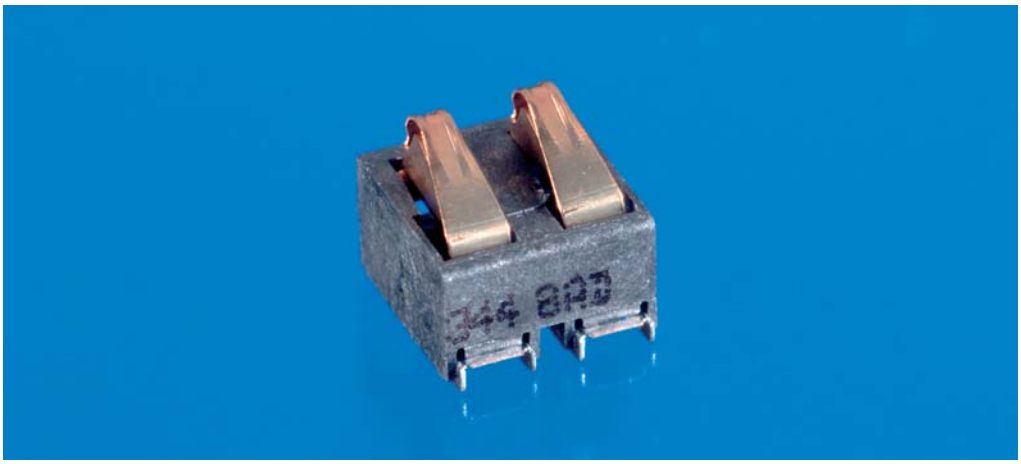

Material and Finish

Insulator:
LCP, glass-filled, black color

Contact Pin:
Phosphor bronze

Contact Plating:
Selectively plated gold over nickel and tin on solder beam

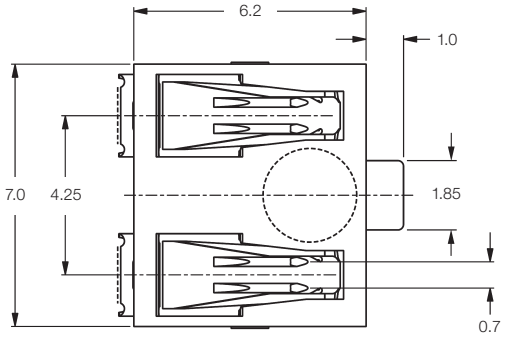

Documentation

Drawing:
C-6337194

Product Specification:
108-3419

Test Report:
GB 39-99

Application Specification:
114-3211

Part No. **6337194-1**

Package Quantity:
550 Pieces per Reel

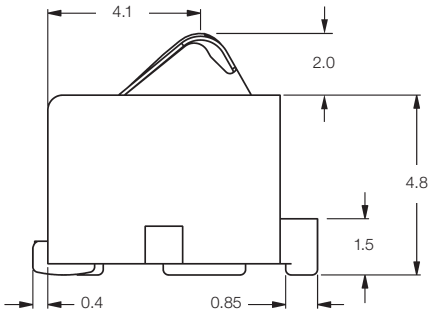

Recommended PCB Layout

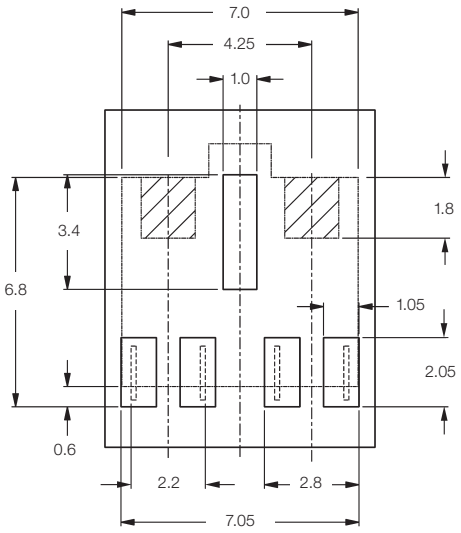

All specifications subject to change. Consult Tyco Electronics for latest specifications.

1.6 mm Pitch Low Profile Battery Connector

Features

Because of their low cost, reliability and high current capacity, Leafspring connectors are ultimately suitable for battery connections. This connector series features a low housing height of 2.1 mm min.

The product can be used with hinged or slided batteries and can carry up to 2 A at 250 V AC.

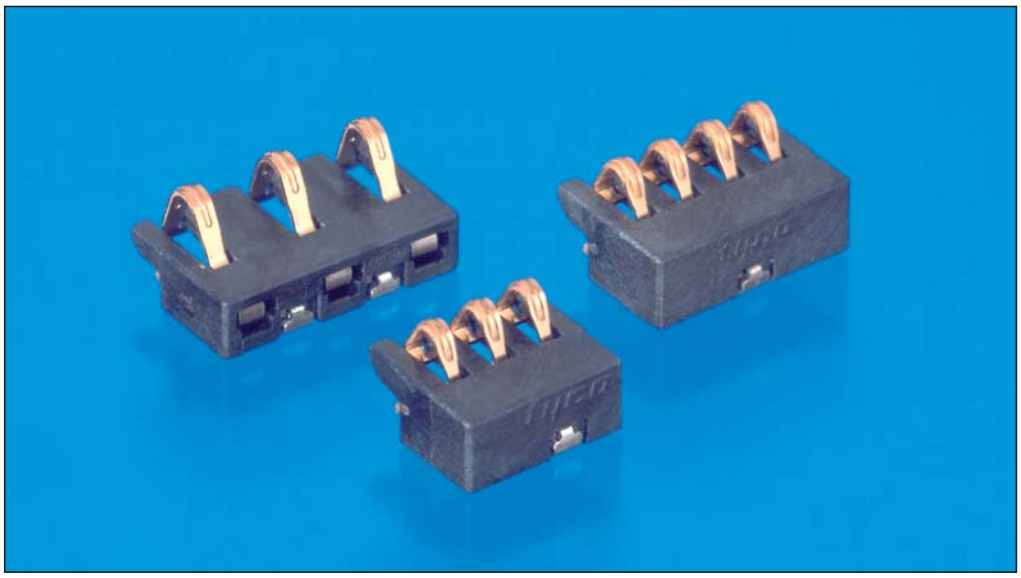

Material and Finish

Insulator:
Thermoplastic, black color, LCP or equivalent UL 94 V-0

Contact Pin:
Copper alloy

Contact Plating:
0.38 µm gold plating on contact area, gold-flash on solder area over 1.27 µm nickel

Documentation

Drawing:
C-See table

Product Specification:
108-60035

Test Report:
501-5629

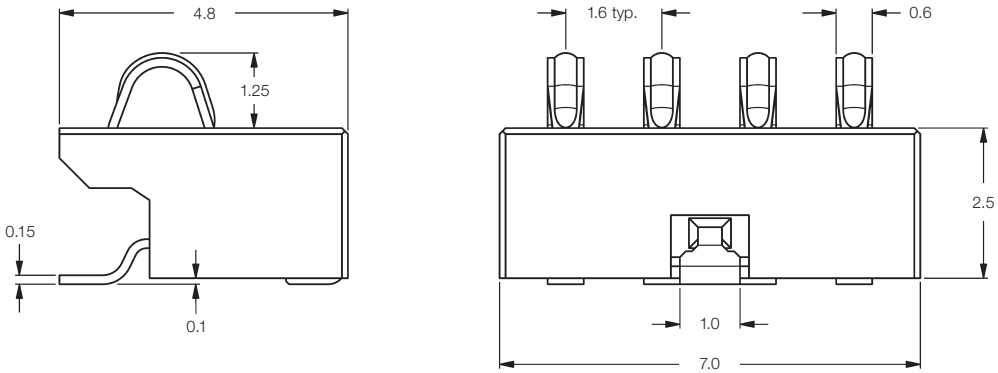

Recommended PCB Layout

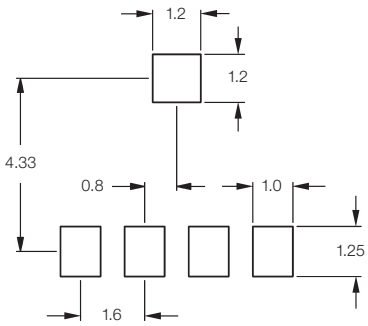

No. of Positions	Pitch (mm)	Housing Height (mm)	Total Height Uncompressed (mm)	Part Number	Package Quantity (Pieces)
4	1.6	2.5	3.75	**292331-1**	1500 per Reel
2	1.6	2.5	3.75	292331-2	1500 per Reel
3	1.6	2.5	3.75	**292331-3**	1500 per Reel
5	1.6	2.5	3.75	292331-5	1500 per Reel
3	3.0	2.1	3.65	**292448-1**	1500 per Reel

Bold Part Numbers have been tooled.

Right-Angle Leaf Spring Battery Connector

Right-Angle Leaf Spring Battery Connector

Features

Right-Angle Leaf Spring Battery Connector provides reliable battery interconnection for mobile handset application.

Typical part numbers are shown below.

For the custom sizes, please contact Tyco Electronics sales.

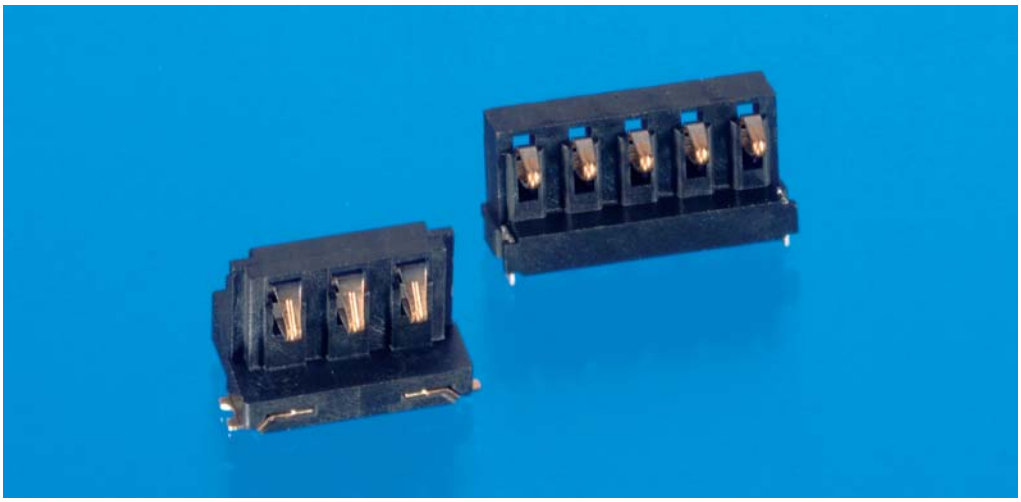

Material and Finish

Insulator:
6T PA, UL 94 V-0, black color

Contact Pin and Solder Pegs:
Copper alloy

Contact Plating:
1.27 µm min. nickel underlayer,
1.0 µm min. gold at contact side
0.05–0.13 µm gold at solder side

Solder Peg Plating:
1.0 µm min. nickel underlayer,
1.0 µm min. tin plating

Documentation

Drawing:
See table

Product Specification:
See drawing

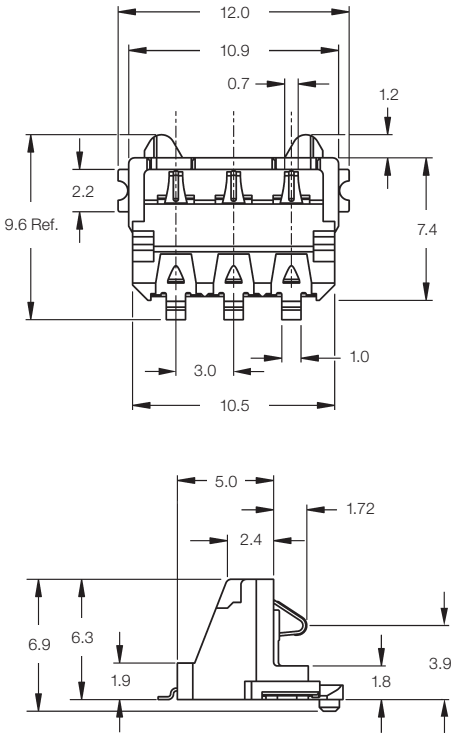

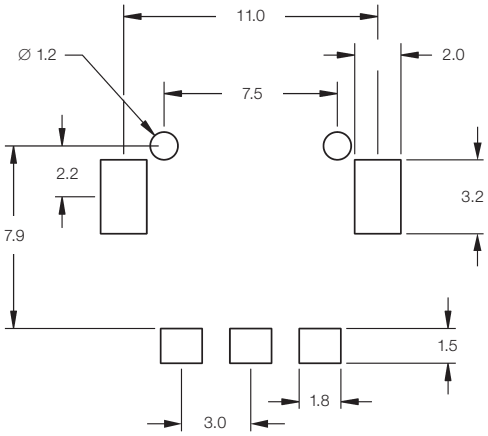

Recommended PCB Layout

No. of Positions	Part Number	Package Quantity (Pieces)	Pitch	Contact Height (mm)	Total Height (mm)	Mount Size Width x Depth (mm)	Finish
3	1717273-1	500 per Reel	3.0	3.9	6.3	10.5 x 8.6	Ni + Au
	1717406-1	500 per Reel	3.0	5.0	7.7	10.5 x 7.4	Ni + Au
	1717413-1	500 per Reel	3.0	4.5	6.9	10.5 x 7.4	Ni + NiPd + Au
	1717562-1	500 per Reel	3.0	4.5	6.9	10.5 x 7.4	Ni + NiPd + Au
	1717838-1	40 per Tray	6.5	6.6	11.5	20.0 x 5.0	Ni + Au
	1746142-1	500 per Reel	3.2	3.5	6.5	12.4 x 3.7	Ni + Au
	1747129-1	500 per Reel	3.0	4.4	6.7	10.3 x 4.9	Ni + NiPd + Au
	1827000-1	40 per Tray	6.5	10.4	17.1	19.9 x 2.6	Ni + Au
	1827928-1	400 per Reel	3.0	5.75	7.6	11.2 x 2.5	Ni + Au
	1871813-1	500 per Reel	2.7	3.9	6.0	10.3 x 4.7	Ni + NiPd + Au

All specifications subject to change. Consult Tyco Electronics for latest specifications.

Battery Block

Features

This battery concept allows for a stable battery connection in any circumstances. The plug side, which is mounted in the equipment, connects to the special connector in the battery.

The battery side connector is equipped with two contact points per contact. The U-shaped contact always keeps the forces in the connector. The special construction of the connector allows for hinged or sliding mating of the battery pack.

The small size of the complete system makes it ultimately suitable for mobile applications.

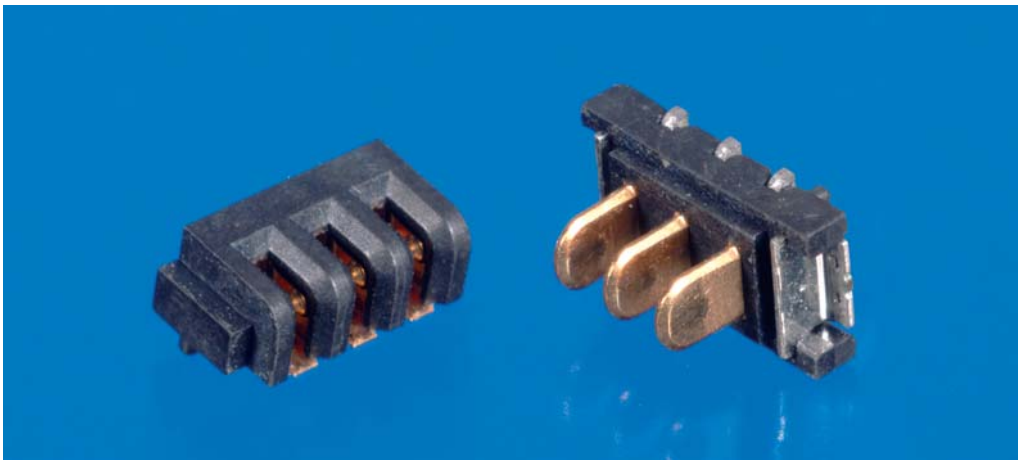

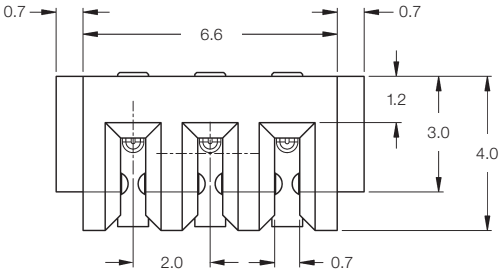

Receptacle: Part No. **1612901-1**
Package Quantity:
1700 Pieces per Reel

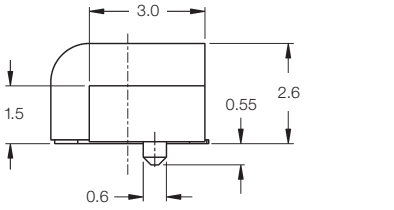

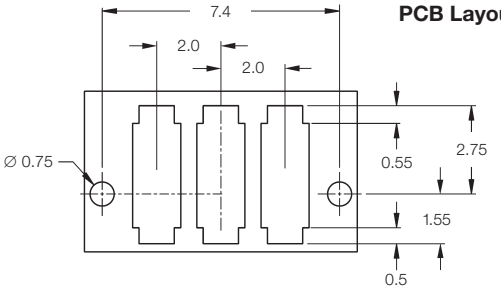

PCB Layout

Material and Finish

Insulator:
Thermoplastic, UL 94 V-0, black color

Contact Pin:
Copper alloy

Contact Plating:
Selectively plated gold over nickel and gold-flash in solder area

Documentation

Drawing:
C-Part No.

Product Specification:
108-5846

Test Report:
501-5452

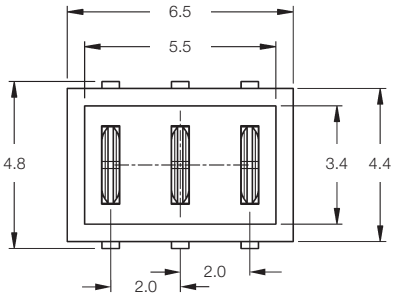

Plug: Part No. **1612898-1**
Package Quantity:
75 Pieces per Tube

Plug:
Part No. **1612898-1**

Receptacle:
Part No. **1612901-1**

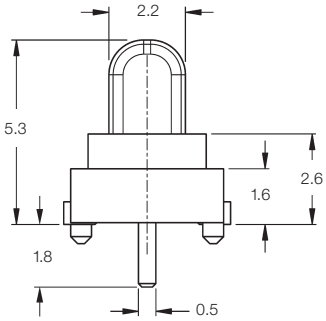

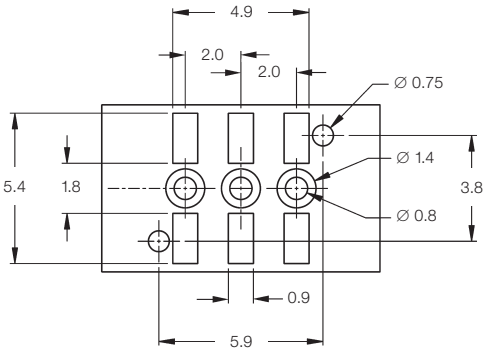

PCB Layout

Inboard SMIA 85 Camera Socket

Features

Inboard SMIA 85 Camera socket according to the SMIA standard. For camera modules with 8.5 x 8.5 mm footprint.

- Fully-shielded camera socket
- Inboard allows for “flat” phone design
- Grounding fingers to camera module
- Keying feature and optical identification feature
- Large pick and place possibility inside
- Grounding clips

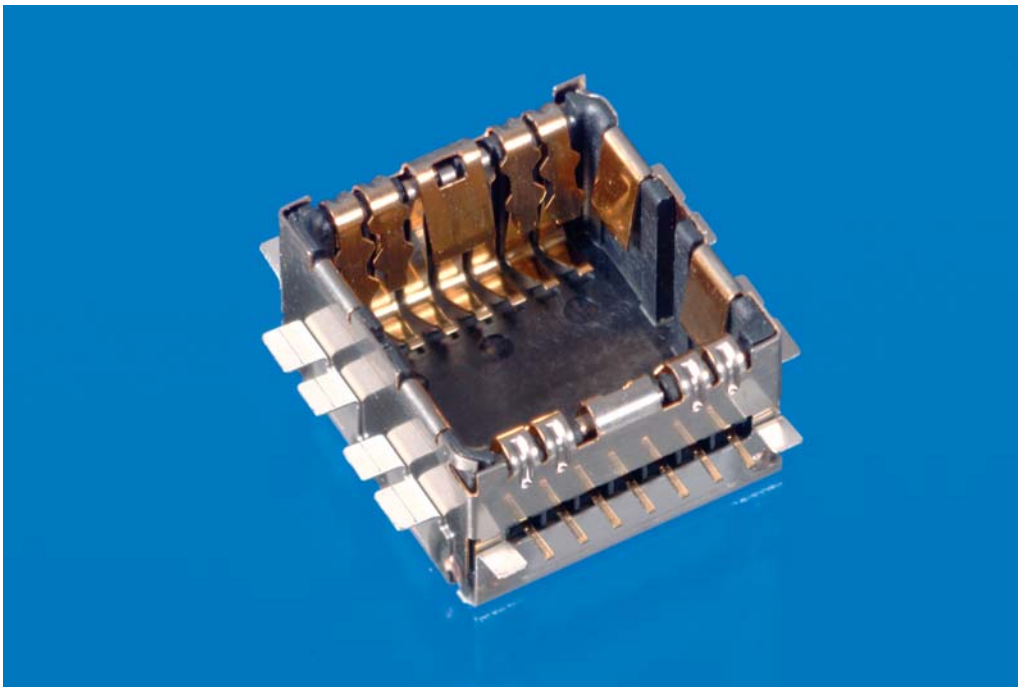

Material and Finish

Insulator:
LCP, black color

Contact Pin:
Phosphor bronze

Contact Plating:
Selectively plated gold over nickel

Shields:
Phosphor bronze

Top Shield Plating:
Selective gold over nickel

Bottom Shield:
Tin over nickel

Documentation

Drawing:
C-1857258

Product Specification:
108-19297

Application Specification:
114-19101

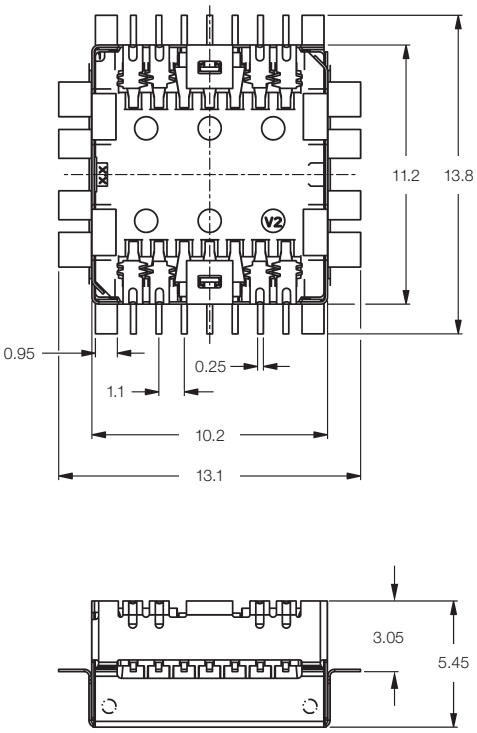

Part No. **1857258-1**

Package Quantity:
800 Pieces per Reel

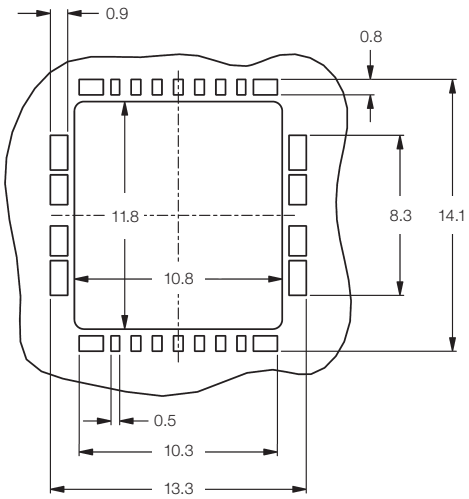

PCB Layout

All specifications subject to change. Consult Tyco Electronics for latest specifications.

Onboard SMIA 85 Camera Socket

Features

Onboard SMIA 85 Camera socket according to the SMIA standard. For camera modules with 8.5 x 8.5 mm footprint.

- 4x camera module locking clips
- Grounding to the camera by clips
- Overmolded contacts
- Keying and optical identification feature

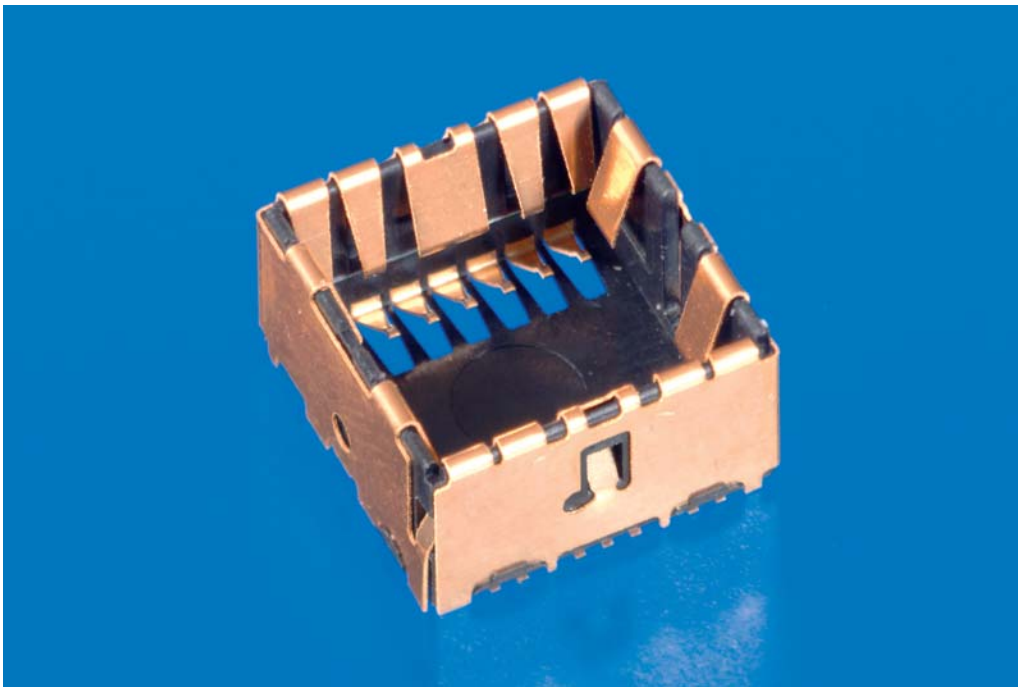

Material and Finish

Insulator:
PA, black color

Contact Pin:
Phosphor bronze

Contact Plating:
Selectively plated gold over nickel

Shields:
Copper alloy

Shield Plating:
Selective gold over nickel

Documentation

Drawing:
C-1857346

Product Specification:
108-19297

Application Specification:
114-19101

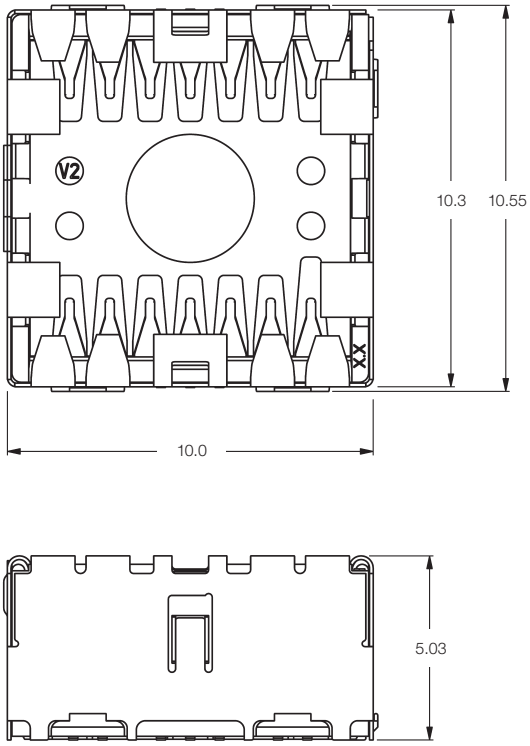

Part No. **1857346-1**
Package Quantity:
1000 Pieces per Reel

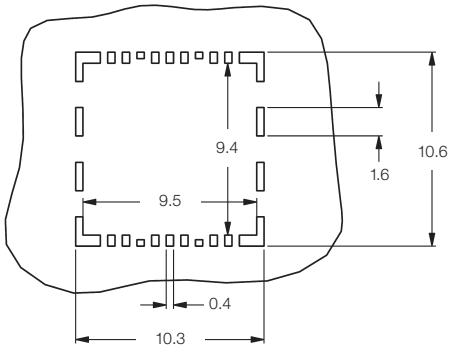

PCB Layout

Super Low Profile (SLP) Connector

Features

This super low profile cable-to-board connector requires very little space for high density and small size mobile electronics.

For your one stop shoping, various cable assemblies are provided to best suit your application.

Applicable Cable

Wire Size: AWG 32
Diameter: 0.39 mm

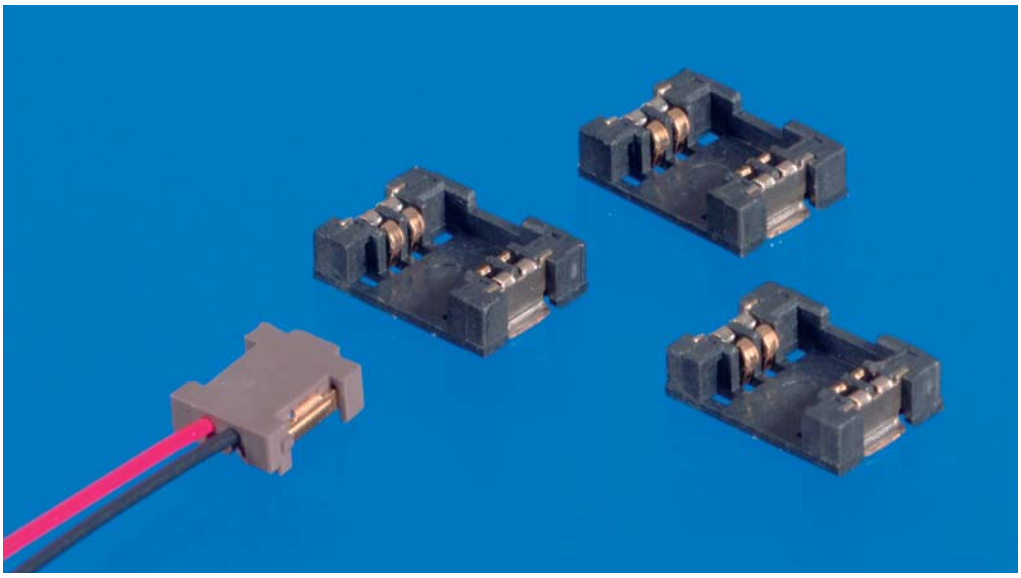

Material and Finish

Insulator:
Thermoplastic,
Black (Board Connector),
Beige (Receptacle Connector)

Contact Pin:
Copper alloy

Contact Plating:
Board Connector:
1.3 µm min. nickel underlayer,
0.3 µm min. gold at mating side
0.05–0.20 µm gold at solder side
Receptacle Connector:
Gold plating

Shields:
Copper alloy

Shield Plating:
Selective gold over nickel

Documentation

Drawing:
See table

Product Specification:
108-5822

Test Report:
501-5593

Application Specification:
114-5357

Board Connector

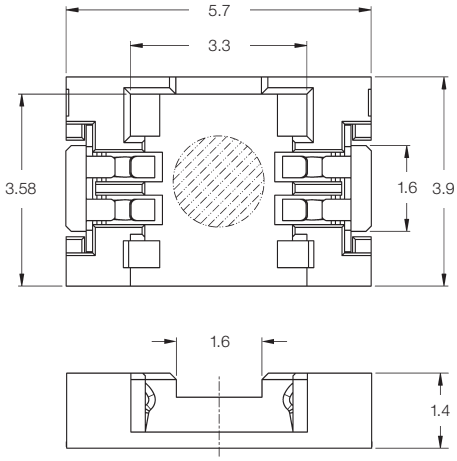

PCB Layout

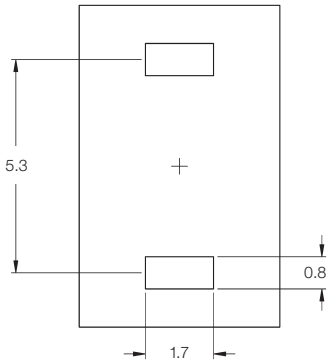

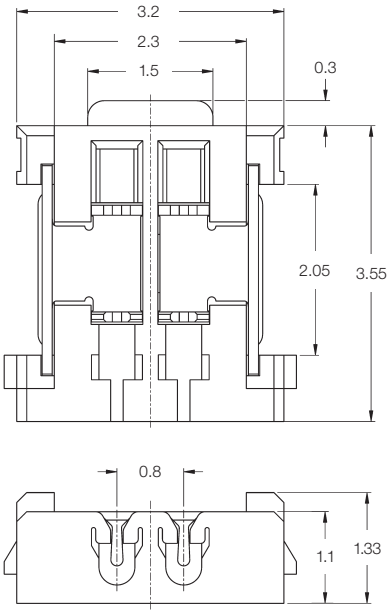

Cable Assembly (Example)

Plug: Part No. **1612537-1**
Receptacle: Part No. **1612534-1**

All specifications subject to change. Consult Tyco Electronics for latest specifications.

Micro SLP Connector

Features

This connector is applied for interconnection to speakers, receivers or other small devices in Mobile equipment.

- Low Profile, Mating Height = 1.4 mm
- Contact Pitch = 0.8 mm
- Applied Wire Size: AWG 32
- Double slot mass termination
- Double latch concept, contact and housing
- Special latch design ensures good tactile feedback
- Size (H x W x L): 1.4 x 2.85 x 4.66 mm
- Design ensures contact protection during mating

Material and Finish

Insulator:
Thermoplastic resin

Contact Pin:
Phosphor bronze

Contact Plating:
0.3 µm gold over 1.3 µm nickel in contact area, gold-flash plating in solder area

Shields:
Copper alloy

Shield Plating:
Selective gold over nickel

Documentation

Drawing:
C-See table

Product Specification:
108-78466

Test Report:
See Product Specification

Application Specification:
114-5426

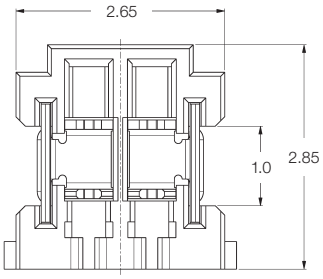

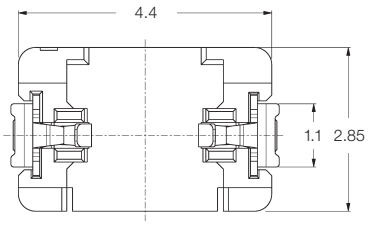

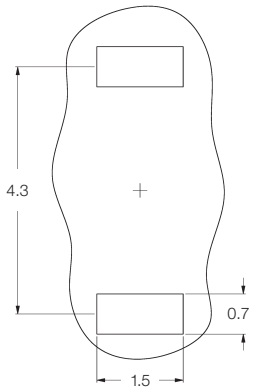

PCB Layout

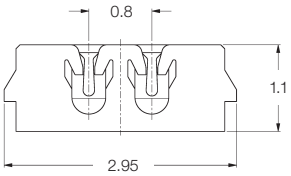

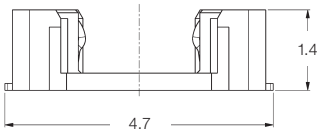

Cable Assembly

Plug: Part No. **x-1981812-x**
Receptacle: Part No. **1981813-1**

Package Quantity:
4000 Pieces per Reel

Product Facts

- Single piece compression connector
- Contact pitch as lows as 0.8 mm
- No. of rows of contacts: 1 through 5 (two rows shown to the right)
- No. of Contacts: 1–200
- Board Separation: 0.5–8.0 mm
- Shielding Capability
- Performs in high-speed applications (3 GHz)
- Low resistance
- Current Capability: 1 Amp typical with higher capability possible with modification
- Easily modified standard designs
- Facilitates automatic assembly, rework, and field upgrades
- Compatible with tin and flash gold contact metallurgy
- Rugged and reliable

STAX™ LD Elastomeric Connectors

Surface-to-Surface Compression Connection for Board Stacking Applications

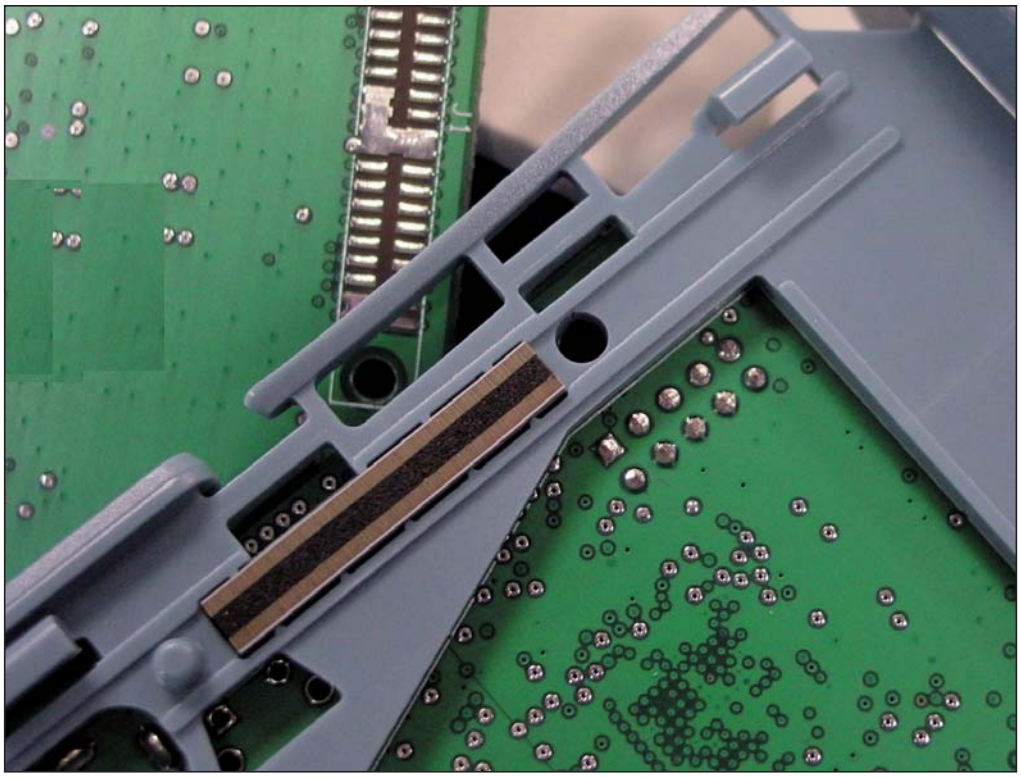

Dual-Row STAX Connector connects two rows of contact pads. Retention slot is provided in PCB separator.

Modifications & Options

The flexible elastomeric manufacturing process allows a fast, easy modification of the products to suit the individual needs of the application. Typically with an elastomer-only solution there is no tooling. There are requirements for minimum production volume.

Elastomeric connectors are viable in most applications where traditional board-board connectors are used. The applications may include high speed, power, digital, grounding/shielded interconnect.

The elastomer is a single piece compression technology. The silicone within the connector provides the normal force (spring). The conductive layers (blend of silicone and silver particles) make redundant electrical contact to the pads on the board.

The STAX LD technology is based upon 30 years of experience in manufacturing and in the hundreds of millions of connectors used in trouble-free applications. This is a low durometer and low contact resistance product.

Tyco Electronics maintains complete control over the quality and performance of the product. The STAX product line is manufactured from basic raw materials (silver or gold, and silicone) using a proprietary manufacturing process.

The result is a connector technology that allows the freedom of design without the traditional limitations of standard product availability. There is no need to compromise the end product at the design stage.

Mechanically, the elastomeric capabilities are flexible. The technology can meet PCB area requirements in applications of board separations under 8.0 mm. Electrically, resistance and current ratings are competitive with most alternative technologies.

How STAX Elastomeric Connectors Work

STAX elastomers are zero insertion force connectors that do not require soldering. They provide a compliant surface-to-surface compression connection when deflected between opposing mirror-image pad patterns.

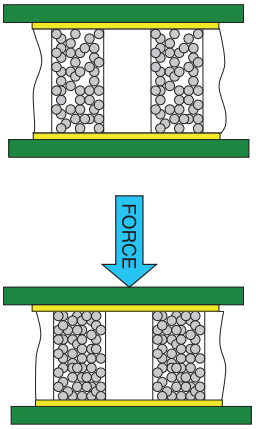

All specifications subject to change. Consult Tyco Electronics for latest specifications.

STAX elastomers are composed of alternating layers of conductive and non-conductive silicone rubber. Silicone rubber is the base material because it has excellent aging properties, chemical stability, electrical reliability, and superior performance in shock and vibration. It also provides a gasket-like seal to protect the contact surfaces.

The conductive layers consist of tiny metallic particles dispersed in silicone rubber. Within each of the conductive layers, the metallic particles create thousands of conductive paths. Therefore, each conductive layer provides multiple points of contact at the substrate interface. While the conductive layers ensure contact between mating pads, the non-conductive layers isolate the conductive layers from each other. The alternating STAX construction, 200 conductive layers per inch (8 per mm), allows multiple conductive layers to make contact to a single contact pad while the non-conductive layers electrically isolate adjacent contact pads.

The advantage of this material construction is that you achieve 3–4 conductive layers typically making contact to a single contact pad on the board. A single elastomeric strip (element) is used to connect an entire row of contacts.

The multiple layers coupled with the thousands of conductive paths in each layer ensure reliable interconnect.

Why use a Tyco Electronics Elastomeric Connector

1 – Simple Implementation
Assembly is easy as making a sandwich. There is no soldering, no special tooling or machinery.

2 – Easily Modified
How often is a standard off-the-shelf connector ideal for your application? Smaller height, higher I/O, greater current capacity, lower resistance, less PCB area are all modifications that can be made.

3 – Fast
The flexible elastomeric manufacturing process allows quick turn on prototypes (1 week) to test solutions and rapid ramp on production. Prototypes are made with the same process as production.

4 – No Tooling
An elastomer-only approach allows the customer to implement the housing and alignment features within existing plastic or metal structure. Modifications of elastomer length, height, and width do not require tooling.

5 – Reliability
Tyco Electronics elastomeric products have been tested to the following:

- MIL STD-1344
- IEC-68-2
- EIA-364
- MIL STD-202
- JIS C 0020
- JEIDA 38
- INTEL SPEC 5.1, 5.2
- NUMEROUS CUSTOMER ACCELERATED LIFE TESTING (ALT)

Test data available on request.

6 – Product Support
Tyco Electronics product engineers work directly with customer engineering teams on modifications and custom solutions for volume applications. All aspects of the design and implementation of the product are reviewed to ensure a successful product launch.

Custom Capability

Application requirements vary dramatically across the many industries that elastomers are used. The technology is flexible in adapting to many of these requirements but, as with any product, there are limits.

1. Determine if an Elastomeric Connector is appropriate for the Application

a) Board-Board separation >8.0 mm?
An elastomer cost is tied closely to material usage (precious metals). In application greater than 8 mm elastomers lose their price competitiveness.

b) X-Y Alignment (>±0.25 mm)?
Unlike a mechanical male-female connector an elastomer cannot perform the alignment of the system. The reference drawings show how pins can provide satisfactory alignment. Other methods can achieve the same result.

c) Sliding Contact?
Silicone by the nature of the product has a high coefficient of friction. Sliding a contacting surface across the elastomer will not be reliable.

d) Contact Pitch: <0.8 mm?
Since an elastomeric connector depends on the alignment of the mating surfaces by an external means, contact pitch <0.8 mm is not easily achievable. However, board real-estate is minimized by achieving more closely-spaced rows of contacts pads than fine-pitch connectors.

2. Determine if "holder" functions can be integrated within existing structure?

The holder is synonymous with the plastic that surrounds traditional mechanical connectors. The most efficient and cost effective way to implement a STAX connector is by incorporating a retaining slot into an existing housing or board separator as shown on the reference designs.

In an approved application, Elastomeric Technologies application engineers are avail-able to assist in:

- Defining customer furnished housing requirements.
- Providing design input for:
  - Alignment
  - Deflection
  - Pad layout
  - Final elastomer dimensions

3. Can Tyco Electronics supply a complete Connector Solution?

Yes. These solutions can take the form of simple holders with STAX connectors held in place by:

- Localized interference
- In-molding
- Grafting

The holder or frame can be plastic, silicone rubber, or metal and typically has low tooling investment:

Below are examples of complete connection solutions in challenging applications.

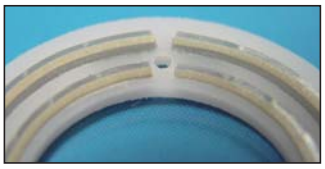

Circular Connector Grafted 160 Pos. (LCP Frame)

Ultra-Low Profile Inmolded 8 Pos. 0.5 mm Height Silicone Rubber Base

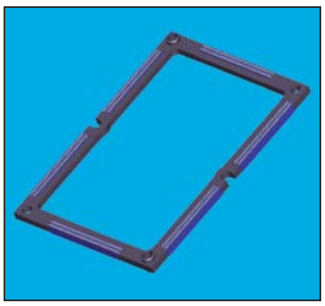

Module-to-Board Grafted 220 Pos. Peripheral Contact Ultem Frame

STAX™ Array Connector

Features

Allows connection to non-standard pad patterns without tooling and long lead time for custom connector.

- Long term reliability and durability
- Economical
- One piece connector
- Custom prototype samples within 1 week

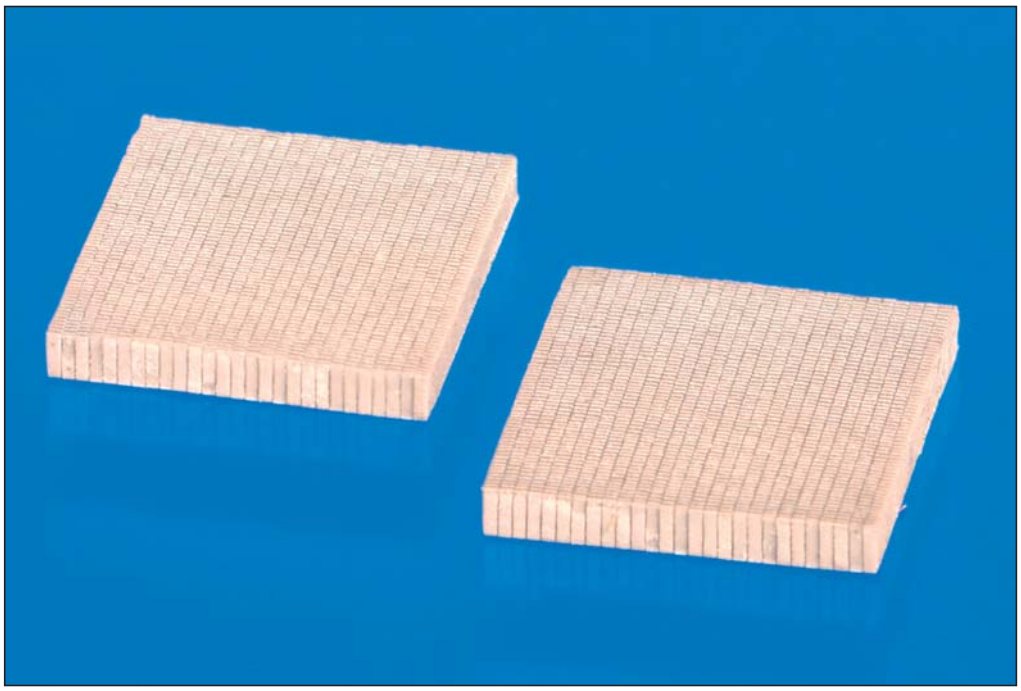

Physical Properties

Height:
0.5–1.5 mm

Minimum Pad Pitch:
0.8 mm

Individual Conductor Width:
0.063 mm

Individual Conductor Length:
0.25 mm

The STAX Array connector is an anisotropic conductive mat material that was developed to interconnect land grid array pad patterns as well as random, circular or other non-linear circuit board pad patterns. As long as the material is deflected between two mating mirror image pad patterns electrical connection is made between the mirror image pads.

Typical Electrical Properties

Contact Resistance[1]:
50 mΩ

Dielectric Constant:
3.1

Insulation Resistance[1]:
10^{12} Ω min

Dielectric Withstanding Voltage[1]:
1000 V without breakdown or arcing

Current Carrying Capacity[1]:
0.5 A

Deflection Force:
0.5–1.5 Newtons/mm^2

Using our core competency in laminating silicone, the Tyco Electronics Elastomeric Technologies product line has created a mat material having .063 mm (0.0025″) x 0.25 mm (0.010″) conductive silicone segments surrounded on all sides by 0.063 mm thick nonconductive silicone insulation. As long as a minimum of 0.4 mm separation is maintained between adjacent pads on the mating surface, shorting is avoided.

STAX array connectors are very easily customized to the users required dimension and can be made in either rectangular or die-cut shapes. Z-axis thicknesses between 0.5 mm and 1.5 mm and dimensions from 2 mm x 2 mm to 60 mm x 60 mm can be accommodated.

Environmental Parameters

Operating Temperature:
–40 °C to +125 °C

Moisture:
0 to 100% RH

Test Report:
TR 368

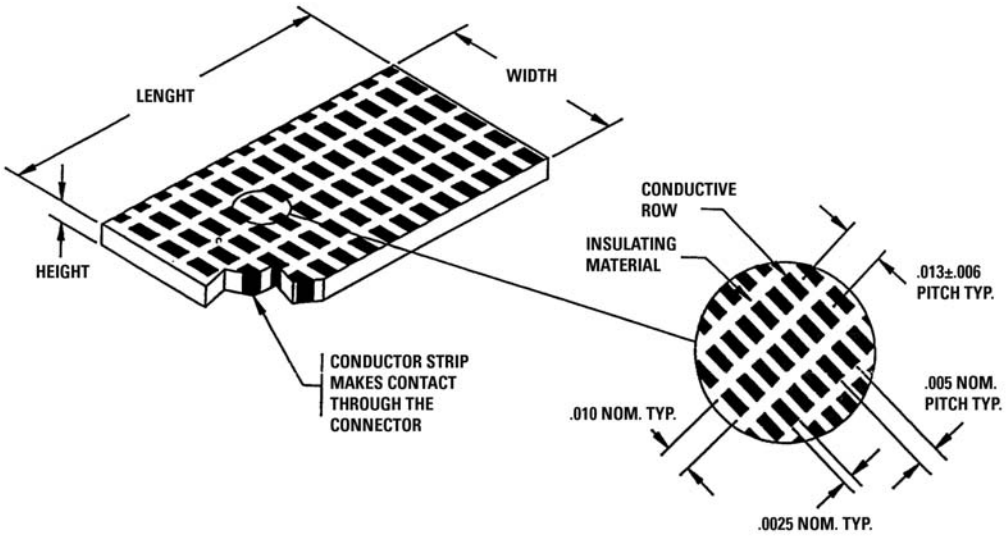

Part No. **3-1442003-2**

[1]) **Elastomer:** 1.0 mm (0.039″) high.
Boards: Gold plated contact pads 0.5 mm (0.020″) wide on 1.0 mm (0.039″) pitch.

All specifications subject to change. Consult Tyco Electronics for latest specifications.

Elastiboot™ Connectors for Microphones

Features

- Boot and STAX elastomeric connector are together as one inseparable piece.
- Elastiboot allows microphone to be provided as an assembly complete with acoustic boot and STAX compression-style connector.
- Large deflection range of 5 thru 50%.
- Standard Elastiboots available for smaller industry-standard leadless microphones of 4.0 and 6.0 mm diameter.
- Elastiboot uses reliable, superior performing Tyco Electronics STAX elastomeric compression connectors.
- Custom, application specific designs can be created.

Physical Properties

Height:
See chart

Minimum Pad Pitch:
See PCB drawings

STAX Conductor Width:
0.064 mm (.0025″)

STAX Conductor Pitch:
0.127 mm (.005″)

Environmental Parameters

Operating Temperature:
–40 °C to +125 °C

Moisture:
0 to 100% RH

Test Report:
TR 341

The Tyco Electronics line of Elastiboot connectors combines an elastomeric connector with an acoustic grommet or “boot” for industry standard 4.0 and 6.0 mm diameter leadless microphones. In a continued effort to lower the cost of hand-held electronic devices, high volume manufacturers are looking for value added sub-assemblies from their component suppliers.

Elastiboot connectors from the Tyco Electronics Elastomeric Technologies product line fill this need by providing ease of assembly in connecting small form-factor microphones to host PCBs. Elastiboots combine the connector with the acoustic grommet (or “boot”) to create a one-piece, orientation free subassembly.

Elastiboot connectors make assembly of microphones into portable electronic devices economical and robust.

- Microphone is placed into Elastiboot connector.
- Elastiboot/Microphone assembly is placed in cavity in front housing of mobile unit.
- Makes blind-mate connection to concentric-ring pads on PC Board during final assembly of unit.
- Concentric-ring pad layouts allow for orientation-free assembly.
- Elastiboot connector captures microphone while providing electrical connection and acoustic sealing.

Elastiboot with Seal Ribs

Elastiboot without Seal Ribs

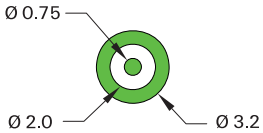

Typical PCB Pattern for 4.0 mm Diameter Microphone

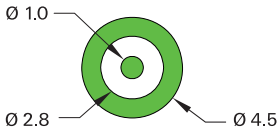

Typical PCB Pattern for 6.0 mm Diameter Microphone

Part Number	Microphone Outer Diameter/ Thickness (mm)	STAX Type	Seal Ribs	Dimensions for Cavity in Host (above) (mm)		
				Diameter	Max. Cavity Depth	Mated Height
2-1442003-2	4.0 / 1.0	LD	Yes	5.17	1.60	5.26
6-1442001-3	4.0 / 1.85	LD	No	5.12	2.60	5.37
9-1442002-7	6.0 / 1.0	Gold	Yes	7.37	1.35	7.46
5-1442003-9	6.0 / 1.0	LD	Yes	7.37	1.35	7.46
1-1442002-5	6.0 / 1.3	SD	Yes	7.50	1.70	7.65
9-1442000-8	6.0 / 1.5	SD	Yes	7.50	2.26	7.66
8-1442001-6	6.0 / 2.2	LD	No	7.30	2.30	7.44
6-1442001-0	6.0 / 2.2	LD	Yes	7.50	2.30	7.50

STAX™ Elastomeric Connectors for COG LCDs

Features

- Easily customized.
- Connects display glass or flex circuit to PCB.
- Inhibits movement of the contact interface during vibration.
- Stable electrical performance over a wide working range of deflection.
- Can accommodate glass-to-board separations of as little as 0.25 mm.
- Applications engineering support from Tyco Electronics to incorporate STAX elastomeric connectors into your product. Support includes board layout, slot definition, alignment and compression.
- In-molded sub assemblies can be created to combine LCD connector with backlighting connection while providing orientation features.

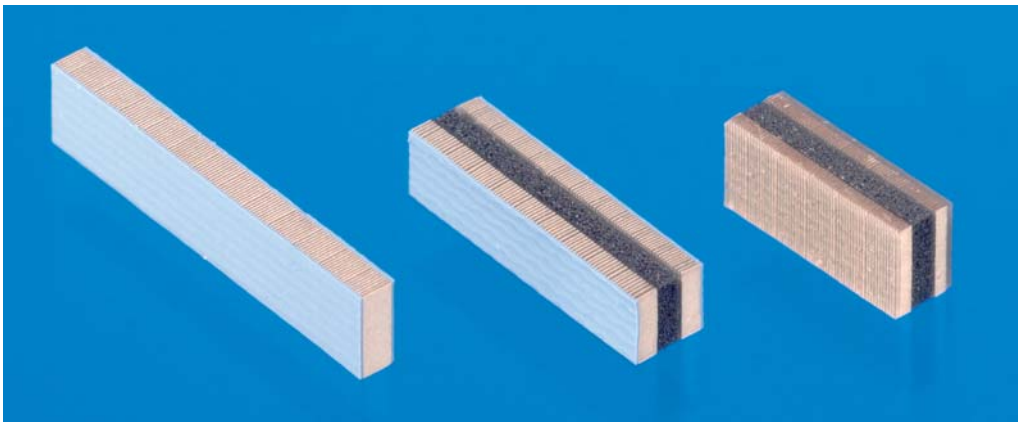

Low resistance STAX elastomeric connectors are the best means of connecting to Chip-on-Glass and other types of LCD modules. Gold STAX and STAX LD elastomeric connectors are easily customized without the tooling charges and lead times typically found with stamped contacts and molded insulators. They can be retained in a slot incorporated into the light guide that allows for automatic placement of the light guide subassembly.

STAX connectors provide a gasket-like contact interface to the ITO traces thereby sealing the interface from the environment. At the same time, the compliant sealing properties of the silicone elastomeric connector maintain intimate conformal contact to the ITO surface.

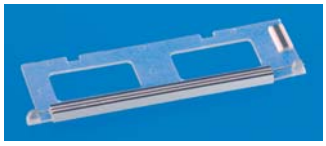

STAX connectors have proven reliability in COG LCD displays for cell phone units – numbering in the hundreds of millions.

Physical Properties

Height:
0.5–12.7 mm (.020″–.500″)

Minimum Pad Pitch:
0.50 mm (.020″)

Conductor Width:
0.064 mm (.0025″)

Conductor Pitch:
0.127 mm (.005″)

Typical Electrical Properties

Contact Resistance: See chart

Dielectric Constant: 3.1

Insulation Resistance:
10^{12} Ω min

Dielectric Withstanding Voltage[1]:
1000 V without breakdown or arcing

Current Carrying Capacity: 1 Amp

Environmental Parameters

Operating Temperature:
–40 °C to +125 °C

Moisture: 0 to 100% RH

Technical Documents

Engineering Test Report:
TR 341

STAX LD – Force vs Deflection vs Resistance Curve

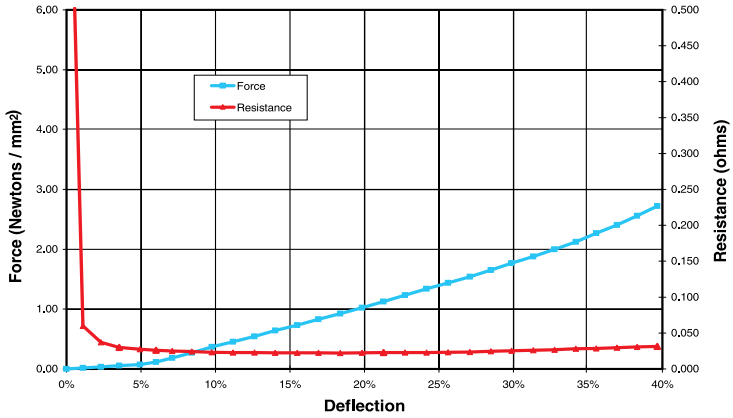

Gold STAX – Force vs Deflection vs Resistance Curve

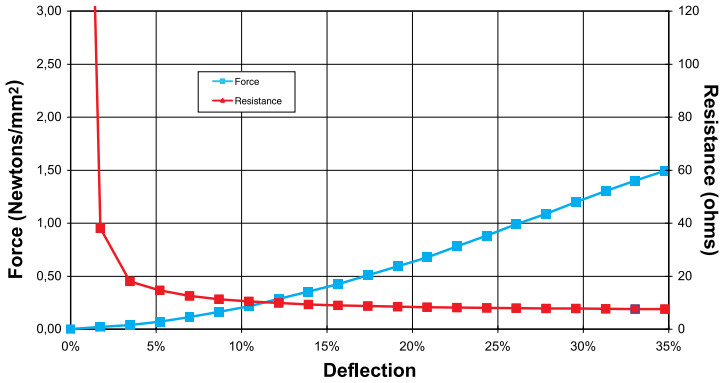

All specifications subject to change. Consult Tyco Electronics for latest specifications.

SMT-ETI-1 STAX™ Connector

Features

- Surface Mount / Pick-n-Place
- Tape & Reel or Bulk Packaging
- Low Resistance: 20 µOhm
- Deflection Range: 5–65 %
- Long term reliability and durability
- Economical
- Readily customized (Hd: 1.0 to 2.25 mm)
- No tooling required
- One-piece connector
- Quick delivery custom prototype samples

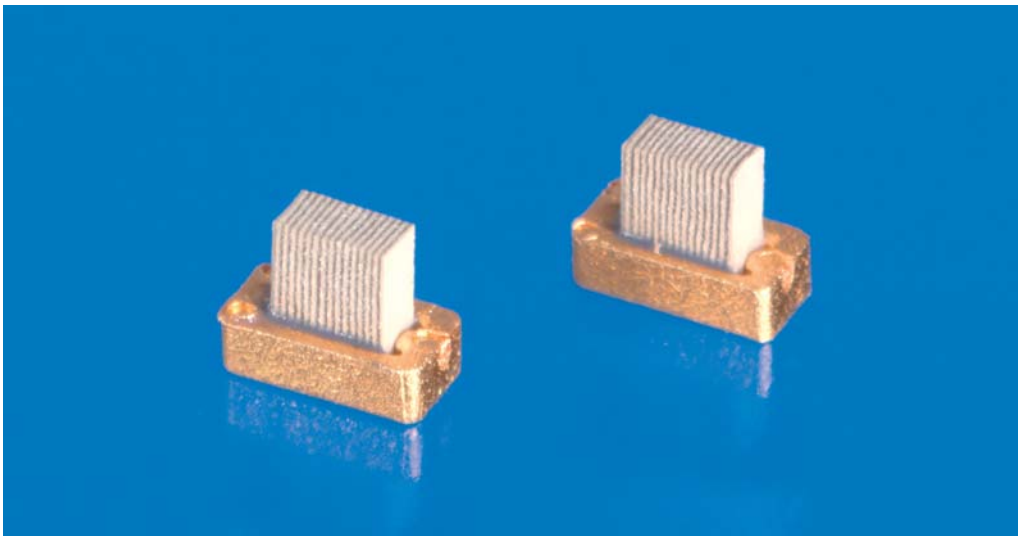

Physical Properties

Deflected Height:
1.0–2.5 mm (.039″–.098″)

Minimum Pad Pitch:
3.0 mm (0.120″)

Elastomer Width:
1.00 ±0.10 mm

Elastomer Length:
1.95 ±0.15 mm

Conductor Pitch:
0.127 mm (.005″)

Pad Dimensions:
See below

Typical Electrical Properties

Contact Resistance[1]:
20 mΩ

Current Carrying Capacity[1]:
2 Amps

[1]) **Test Boards:** Gold plated contact pads

Environmental Parameters

Operating Temperature:
–40 °C to +125 °C

Moisture:
0 to 100 % RH

Technical Documents

Qualification Test Report:
TR 371

Tyco Electronics Elastomeric Technologies™ continues to demonstrate technology leader-ship with the introduction of the INDUSTRY'S FIRST surface-mount elastomeric connector product.

The SMT-ETI-1 is a dedicated single position connector used in lieu of a spring-finger, pogo-pin, or compliant materials in portable electronic and communication devices. The applications include grounding, power connection, and shielding to eliminate EMI and RFI.

The SMT-ETI-1 is an integration of Tyco Electronics' ETI and MID technologies:

- The surface mount holder is a gold plated plastic and provides a low profile – small form factor "standard" base.
- A STAX™ HT (high temperature resistant) elastomer is grafted into the SMT holder for a single-piece assembly.

A STAX™ elastomer has the widest range of deflection in low profile connection (5 thru 65 %) while maintaining consistent performance and reliability. Combining the standard base with the flexibility of the elastomeric manufacturing process allows for an optimized connector for each application.

This minimizes the deflection forces while compensating for z-axis tolerances. The silicone provides the normal force of the connector, seals the contact interface, and even conforms to irregular surfaces. Standard parts are available – modifications can be easily created.

The electrical characteristics of the SMT-ETI-1 rival all competitive technologies in resistance and current carrying capacity.

The SMT-ETI-1 STAX connector features silver particles embedded within a low durometer silicone. Within each of the conductive layers, the conductive particles create thousands of conductive paths. Each conductive layer provides multiple points of contact to the substrate interface.

The pitch of the conductive layers is only 0.127 mm (0.005″), allowing multiple conductive layers to make contact to each substrate pad.

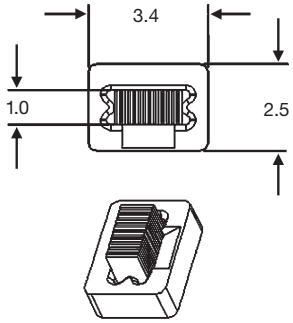

Part No. **1-1442004-7**

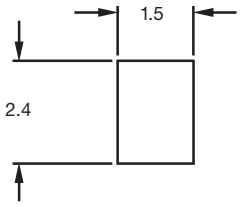

Top PCB Contact Pad (Flash-Gold) Dimensions

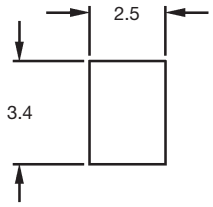

Bottom PCB Contact Solder Pad Dimensions

STAX™ Coax Connector

Features

- Low cost, low height and high performance
- Low insertion loss 0–0.5 dB from 0–6 GHz
- VSWR <1.07 from 0–6 GHz
- Wide working range of deflection
- Long term reliability and durability
- Surface mount / pick and place
- Low board separation <2.5 mm
- Technology can support board separations <1.5 mm
- Easily modified free height
- No tooling required for height modifications
- Modified prototype samples within 2 weeks

Physical Properties

Board Separation:
2.5 mm ±0.2 (Standard Part)

PCB Board Area:
4.0 mm diameter

Environmental Parameters

Operating Temperature:
–40 °C to +125 °C

Moisture:
0 to 100% RH

Electrical Properties

Contact Resistance:
<50 mΩ

Insulation Resistance:
10^{12} Ω min

Dielectric Withstanding Voltage:
1000 Volt

Technical Documents

- Qualification Test Report – TR 368
- RF Performance Report – 00266

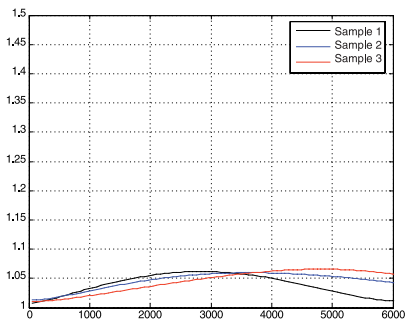

Tyco Electronics' STAX coax connector is the first surface mount RF coax connector on the market that uses elastomeric connector technology to provide an economical means to achieve low board separation while maintaining excellent RF signal integrity between PCBs.

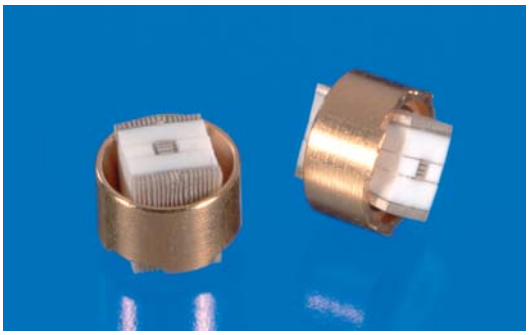

The connector uses laminated sections of conductive and non-conductive silicone that are tuned to provide a 50 ohm impedance line between mated substrates.

The single piece construction of the STAX coax connector eliminates some of the signal anomalies normally associated with mated pairs of metal contact coax connectors. The dimensional relationship of the inner and outer conductor is consistently maintained throughout the connector.

With its metal holder, the STAX coax connector can be surface mount soldered to the PCB. An additional metal SMT holder aligns the connector to the mating PCB. If adequate PCB alignment is already maintained by other means, the coax connector may not need the additional mating receptacle and can become a blind-mating connector. This has an additional advantage in space constrained mobile applications where very fine-pitch board-to-board connectors are also used.

619229-1 SMT STX Coaxial Connector Assembly

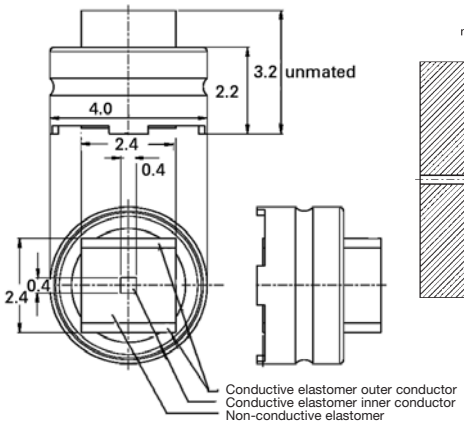

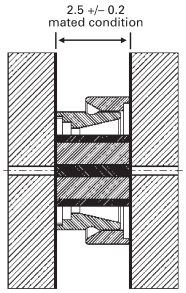

PCB Pattern

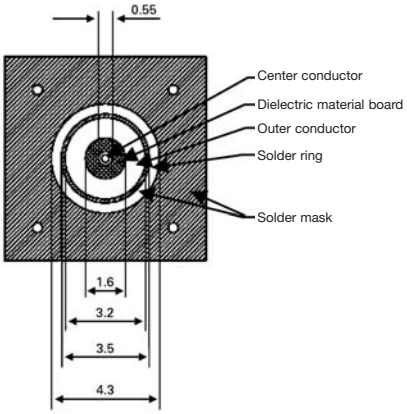

619238-2 SMT Mating Target Holder

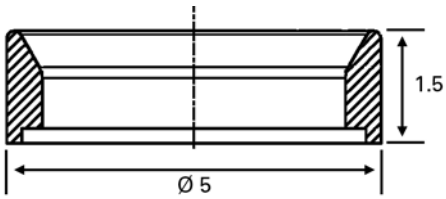

PCB Pattern for Mating Target

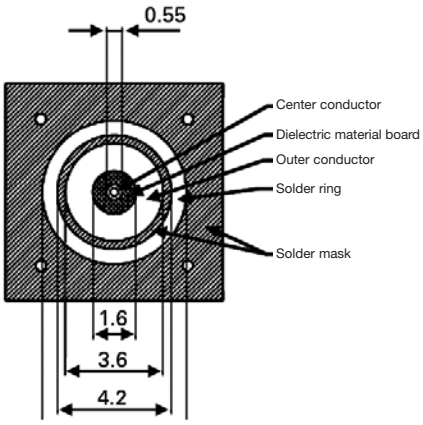

Part No.	**619229-1**	**STAX SMT Coax Connector Assembly:** Consists of STAX coax elastomer in round SMT holder.
Part No.	**619238-2**	**Mating SMT Target Holder:** Controls alignment between PCBs
Part No.	**1442004-1**	**STAX Coax Elastomer only:** Used with customer furnished holder

All specifications subject to change. Consult Tyco Electronics for latest specifications.

Vibration Motor Connector

Vibration Motor Connector

Features

- Flexibility to modify the standard product offering to meet custom applications
- Eliminates obsolete inventory due to changing application requirements
- Minimize PCB space
- Eliminates fretting corrosion issues
- Enables single piece assembly
- Eliminates troublesome soldering of wires or use of male / female connectors
- Eliminates the need and time to tool many different spring contacts
- Economical
- Long term reliability and durability
- Custom prototype samples within 2 weeks

Tyco Electronics' vibration motor elastomeric assembly is an innovative option to standard motor attachment methods using our proven STAX™ layered elastomeric connector product line.

Hundreds of millions of our STAX family of connectors have been used to connect flex circuits, LCD's, microphones, and speakers within space-constrained products such as mobile phones, pagers, PDAs and disk drives. This solution allows the compression mate of a vibration motor to almost any printed circuit board.

The STAX connector consist of alternating layers of conductive and non-conductive silicone.

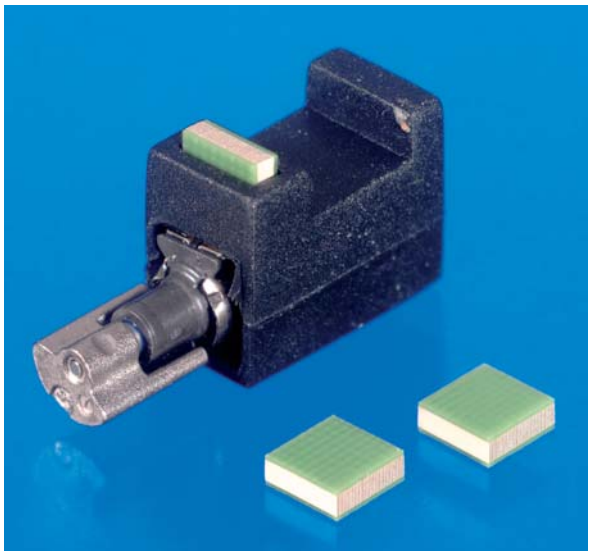

These layers are typically 0.064mm thick on 0.127 mm centers and make redundant surface-to-surface connection when deflected between the flat contact pads on the vibration motor to the main PC Board. Vibration motor connectors provide a excellent combination of electrical performance, reliability, functionality and durability.

Physical Properties

Application Deflected Height:
8.7 ±.02 mm (.342 ±0.008″)

Compression Force:
0.4 kg (nominal deflection)

Grommet Material:
Silicone Rubber
(55 Shore A durometer)

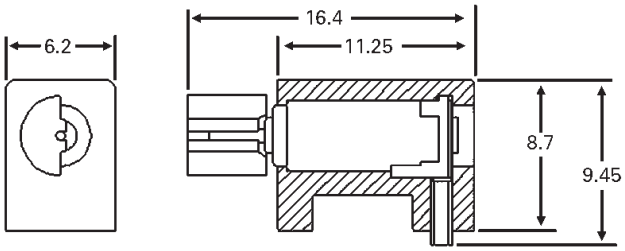

VIBE MOTOR CONNECTOR ASSEMBLY

Typical Electrical Properties

Standard Voltage:
1.3 V DC

Rotating Direction:
Clockwise

Standard Load Rotation:
9000 ±2000

Standard Load Current:
105 mA

Starting Current:
130 mA max

Insulation Resistance:
1 Mega Ohm

RECOMMENDED PCB PAD LAYOUT

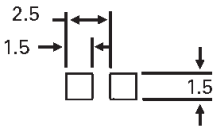

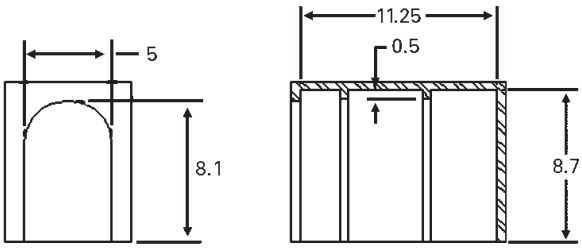

RECOMMENDED APPLICATION HOUSING SIZE

Environmental Parameters

Operating Temperature:
–10 °C to +60 °C

Moisture:
0 to 100% RH

Part No. **6-1442002-7**	Vibration Motor Connector Assembly
Part No. **7-1442002-3**	Rubber Vibration Motor Boot
Part No. **7-1442002-2**	Sanyo Motor # RS-2561
Part No. **7-1442002-1**	Elastomeric Silver STAX™ Connector

Engineering Notes

All specifications subject to change. Consult Tyco Electronics for latest specifications.

Antenna Manufacturing Capabilities

Tyco Electronics Antenna Products

combines world class antenna design competency with unsurpassed integration and optimization skills to provide the best integrated solutions for various applications.

Our global footprint and wide variety of manufacturing technologies allows our customer s to be able to choose from a large base of manufacturing technologies and factory locations.

Applications

Voice

Tyco Electronics Antenna Products provides handset OEM's with the highest performing, lowest cost embedded antenna solutions. With over 500 million Tyco Electronics cellular handset antennas designed and manufactured to date, we offer the worldwide spectrum of frequencies required to support cutting edge embedded antenna solutions. In addition to the handset segments, the digital cordless telephone segment presents secondary voice capability for Tyco Electronics. As this market continues its evolution into the 900 MHz and 2.4 GHz frequency bands, Tyco Electronics Antenna Products is positioned to provide cutting-edge embedded antenna solutions.

Data

Rapid growth in the wireless data market is creating unprecedented demand for embedded antenna solutions. With the proper antenna, these devices can offer "any time" wireless access. Data devices that utilize Tyco Electronics Antenna Product embedded antennas are PDAs, laptops, access points, bar code scanners, compact flash cards, PC cards, printers, print servers, cameras, etc. The Tyco Electronics Antenna Products Group has developed an entire line of high performance, low cost embedded antennas for wireless data applications. Tyco Electronics has a variety of cutting-edge " off the shelf" and customized embedded solutions for virtually any wireless device. Covering 802.11a/b/g/n, WLAN, WWAN, WiBro, WiMAx, WiFi, DVB and UWB applications.

Bluetooth

Bluetooth is revolutionizing the communication industry. It facilitates fast and secure transmissions of voice and data even when devices are not within line-of-sight. Devices include mobile phones, computers, cameras, printers and virtually any device that has information to communicate. The Tyco Electronics Antenna Products Group is at the forefront of Bluetooth antenna development with a number of standard antenna products that are already being utilized in the first generation Bluetooth devices on the market.

Three Key Technologies

MID (Molded Interconnect Device) Antennas

In 2000, Tyco Electronics acquired Molded Interconnect Device, LLC (MID). Now part of Tyco Electronics Antenna Products, MID is headquartered in Rochester, NY and prides itself in being the world's leader in utilizing its technology to make everyday products better. With over 500 million parts in service, our products are being utilized in applications ranging from joysticks to cell phones as well as minivans to airplanes. In its most basic form, MID technology can be defined as any product that results in selectively plated plastic parts. This technology results in outstanding repeatability, which is ultimately suitable for the design and production of complex shaped antennas.

MID Two Shot Antennas

- Design flexibility for 3D patterning
- Fewest manufacturing steps and processes
- Repeatability of manufacturing process
- Ability to integrate multiple functions
- Flexible manufacturing capacity
- Manageability of demand increases
- Simple low cost standardized interconnect utilized
- Best utilization of the 3D space that is available
- Tightest tolerances for pattern registration

Stamped Metal and Overmolded

Tyco Electronics Antenna products has developed a line of low profile, high performance Stamped Metal embedded antenna solutions for single-, dual-, tri-and quad-band applications. Tyco Electronics Stamped Metal antennas offer OEMs, a low cost and highly repeatable manufacturing solution, in a number of standard "of the shelf" and customized antenna designs. Our stamped embedded antennas address the needs of a variety of applications from 400 MHz to 5 GHz such as; mobile phones (AMPS, TDMA, CDMA, WCDMA, PCS, DCS and GSM), cordless telephones, personal digital assistants (PDA), laptop computers, global positioning system (GPS) devices and wireless networking (Bluetooth, 802.11 and ISM).

Stamped Antennas

- Stamped and heatstaked
- Stamped and overmolded
- Pure stampings
- Typically the lowest cost antenna technology when considering the interconnect cost as well
- Interconnect can be designed in (contacts)
- Production die is high volume capable
- Hand assembly stations can be added for volume upswings

All specifications subject to change. Consult Tyco Electronics for latest specifications.

Antenna Manufacturing Capabilities

FPC and Printed Wiring Boards (PWB) Antennas

The Tyco Electronics Antenna Products Group has developed a line of low profile, high performance Print Wiring Board (PWB) antenna solutions for single-, dual-, tri-and quad-band applications. Allowing virtually any wireless product to operate on different frequencies without multiple antennas. Our FPC and PWB antenna solutions address the need of a variety of applications: mobile phones (AMPS, TDMA, CDMA, WCDMA, PCS, DCS and GSM), cordless telephones, personal digital assistants (PDA), laptop computers, global positioning system (GPS) devices and wireless networking (Bluetooth, 802.11 and ISM).

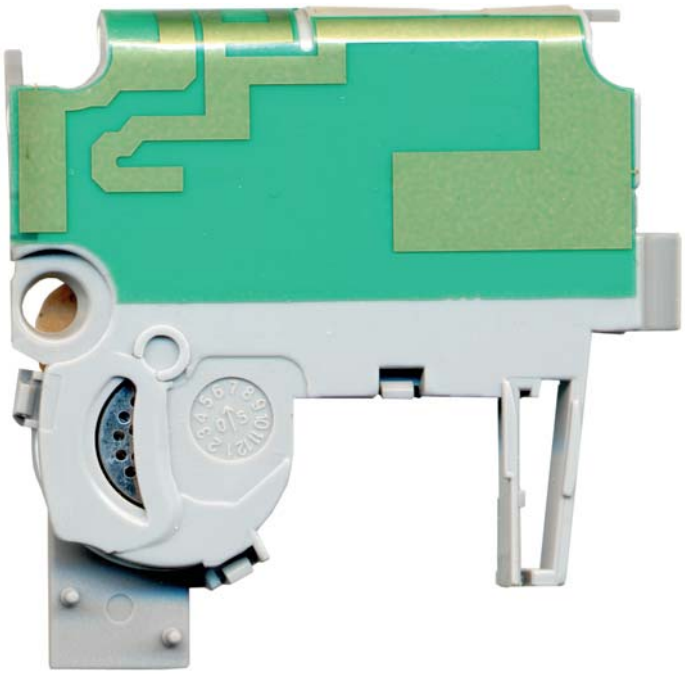

FPC and PWB Antennas

- Pure FPC/PWB
- FPC on a carrier
- Best flexibility for pattern changes during production
- More ability to quickly tool to higher demand during production

RF Engineering Capabilities

Antenna Design at Tyco Electronics

Tyco Electronics gets the optimal performance out of antennas by applying system-level integration and optimization design expertise to each wireless application. Our practical application and simulation skills are second to none with global expertise in the U.S., Europe, and Asia.
Our global presence places antenna design experts next to the customer.

Modeling and Simulation

3D Part Design at Tyco Electronics

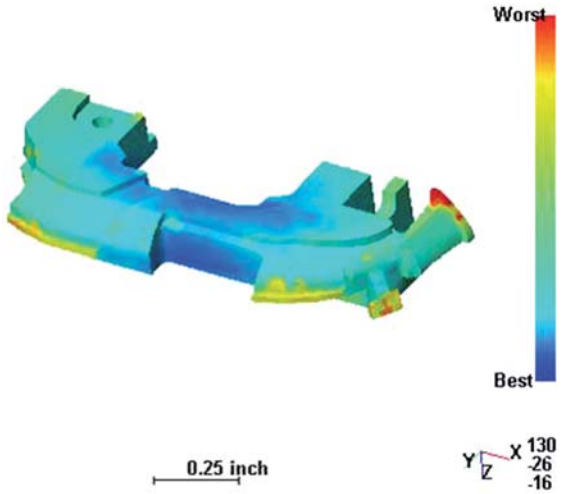

Modeling and Simulation

Need info

- Pro Engineer Wildfire 2.0 CAD software
- Auto CAD 2005
- MPA Moldflow to predict moldings behaviors
- Pro Mechanica stress and thermal analysis software

Customer Support and Design Integration

Tyco Electronics provides world class antenna design integration and optimization to its customers. Tyco Electronics prides itself in working with customers to optimize not only the antenna performance but also the total system performance. The earlier that Tyco Electronics can be involved in an integration project, the more opportunities there will be to deliver the most optimal solution.

Six Step Integration Process

- **Evaluation:**
  Is the customer's expectation reasonable?
- **Modeling:**
  Utilizing Ansoft HFSS
- **Rapid Prototyping:**
  Are we making electrically working samples or just dummy mechanical samples? Prototypes can be made in 1 week.
- **Testing & Optimization:**
  Do we have the real device and is it the latest version?
- **Production:**
  Pick the manufacturing technology after the design is developed and fully understanding our customer's goals
- **Quality Assurance:**
  Our quality focus is inherent throughout the entire design process and product life cycle.

All specifications subject to change. Consult Tyco Electronics for latest specifications.

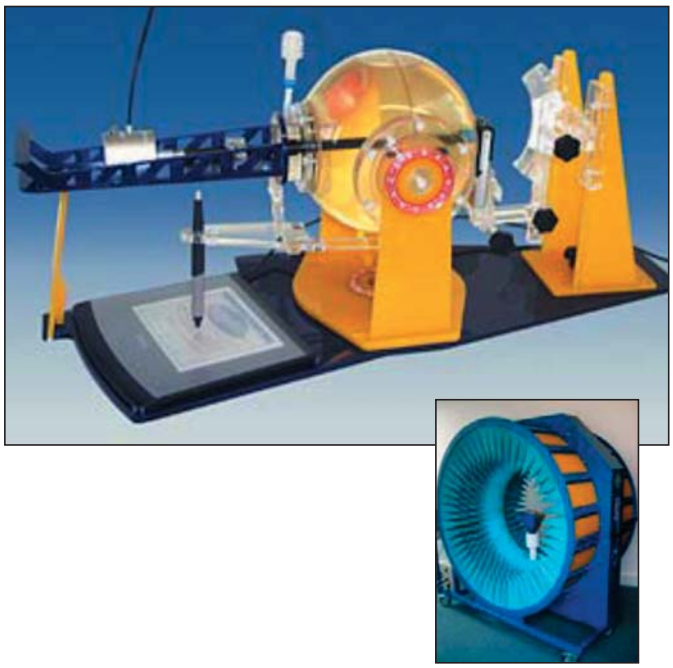

RF Engineering Capabilities

- Six Anechoic Chambers
- One Satimo Near Field Spherical Measurement Chamber
- Satimo Upgrade for mobile phone compliance testing
- Narda® SAR Measurement Equipment FEM Electromagnetic Modeling (Ansoft HFSS)
- One CTIA compliant 3D test chamber
- Network analyzer to 20 GHz for Laptop programs

Aptos, California

RF Engineering Locations:

- US
- China
- Japan
- Taiwan
- Korea
- Europe

Engineering Notes

All specifications subject to change. Consult Tyco Electronics for latest specifications.

MID Technology at Tyco Electronics

Tyco Electronics prides itself in being the global leader in providing Molded Interconnect Technology (MID). In it's most basic form, MID technology can be defined as any product that results in selectively plated plastic parts. This technology can be used in three basic ways, to solve 3-dimensional electro-mechanical problems, for shielding purposes, or to develop antennas.

MID Technologies

Tyco Electronics can manufacture MID parts using three manufacturing technologies, Two Shot, Laser Imaging, and Laser Direct Structuring.

Two Shot MID Technology

Two Shot

- Sequential injection molded substrate
- A plateable resin and a non-plateable resin
- Imaging in the molding process
- All electroless plating of catalyzed surfaces

Laser Imaging MID Technology

Laser Imaging today is typically only used for rapid prototyping

- Manufacturing using a circuit board production type process
- Machine or single shot mold in 3–10 days
- Laser image circuitry in 3–5 days
- Circuitry and plating are accurate to production processes

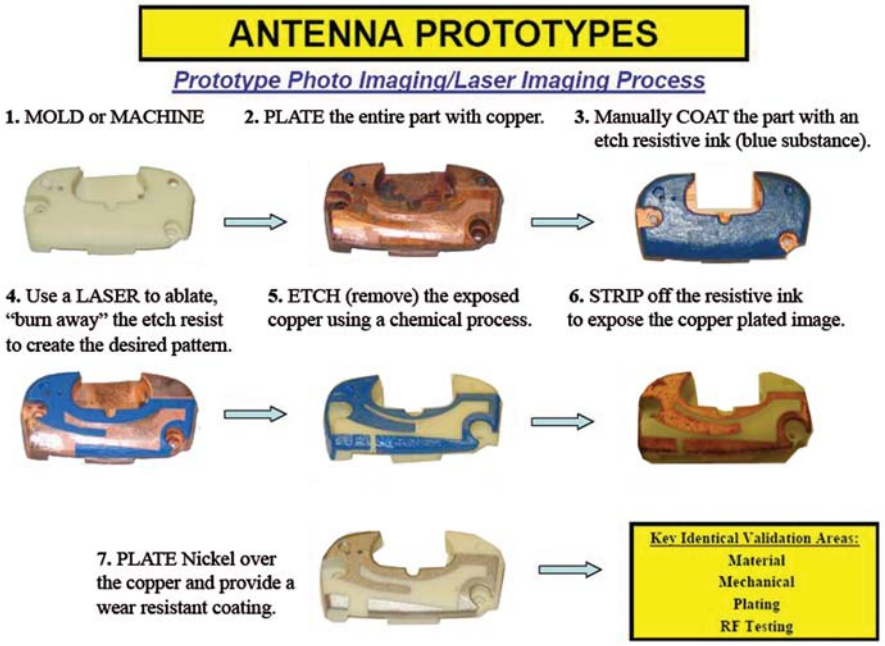

MID

Laser Direct Structuring Technology

Laser Direct Structuring (LDS) Technology

- Offers the ability to create parts with finer line width and spacing than conventional MID processes will allow for.
- The structure is molded in a standard single shot mold using one of several proprietary plastics available.
- Desired interconnect pattern is directly written on the resulting molded part and the conductive paths are plated using industry standard methods.
- The plating adheres only where the plastic has been activated by the laser.

3D Part Design

Tyco Electronics provides its customers vast design expertise over a wide variety of manufacturing technologies. Our design engineers are experts in two shot design and product integration for MID products. Optimal solutions are engineered with the appropriate MID technology to best suit the application.

Modeling and Simulation

Tyco Electroniocs employs the most up to date design tools available. We use sophisticated 3D modeling and simulation packages to accurately manufacture and predict the end product.

- Pro Engineer Wildfire 2.0 CAD software
- Auto CAD 2005
- MPA Moldflow to predict molding behaviors
- Pro Mechanica stress and thermal analysis software

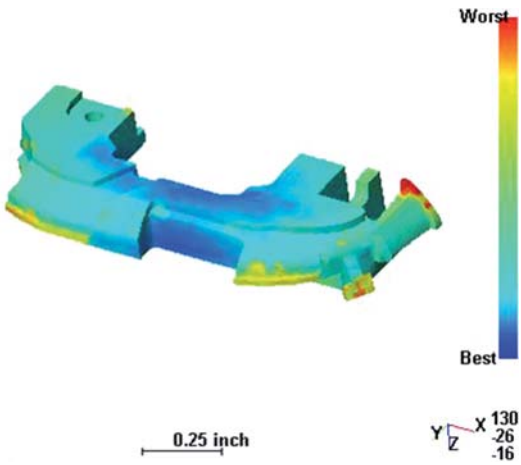

All specifications subject to change. Consult Tyco Electronics for latest specifications.

USB Data Cable Assembly

Features

- USB Data cable intend to connect a mobile phone to computer etc.
- Can be used as charger
- Connector and cable are approved by USB Org.
- PU and PVC cable, both types are available.

Connector

USB A Type
USB B Type
Mini USB A Type
Mini USB B Type
Can design the connector to mate customer system

Cable

1P+2C+AL+D+B USB 2.0
28 AWG x 28 AWG
28 AWG x 26 AWG
28 AWG x 24 AWG
28 AWG x 22 AWG
28 AWG x 20 AWG

Overmolding

PVC
PVC Free/PU

USB Cable Assembly

Connectors

Music Cable Assembly

Features

- Audio cable intend to connect a mobile phone to the line-in on a stereo amplifier.
- PU and PVC cable, both types are available.

Connector

RCA Plug

2.5 mm Audio Plug/Jack

3.5 mm Audio Plug/Jack

Adapter from Plug to Jack

Can design the connector to mate customer system.

Cable

Twin Cable

Shielded Twisted Pair Cable

Overmolding

PVC

PVC Free/PU

Music Cable Assembly

Connectors

All specifications subject to change. Consult Tyco Electronics for latest specifications.

Charger Cable Assembly

Features

- The semi-goods or finished goods intend to be used for the charger.
- PU and PVC cable, both types are available.

Connector

USB Plug

2.0 mm DC Plug

3.5 mm DC Plug

Can design the connector to mate customer system.

Cable

Can follow customer specification.

Overmolding

PVC

PVC Free/PU

Charger Cable Assembly

Connectors

Mobile Phone Headset Solution

Speaker

Diameter:
15 mm

Impedance:
16 Ω ±15%

Frequency Range:
20 Hz up to 20 KHz

Sensitive:
108 ±4dB at 1 kHz

Nominal Power:
3 mW

Maximum Power:
5 mW

Connector
3 Pin, gold or nickel plating

Cable

Length:
400 ±15 mm

Pull Force:
30 N/min

Flexing Cycle:
3000 times/300 g

Non-Migration:
PS 60°, 500 g/72 H

Cover:
PVC

Color:
Grey/Silver

All specifications subject to change. Consult Tyco Electronics for latest specifications.

Bluetooth Hands-Free Solution

Key Features

- Continuous Talk Time: 9 hours
- Standby Time: 400 hours (16 days)
- Weight: 12 g
- Voice Dial
- Redial Last Number1
- Call Muting
- Multi Pairing2
- Fast Charge 2 hours
- Reversible hook with anti allergic soft material for long hold.
- Bluetooth R v 1.2 Headset and hands-free profile compatible.
- For phones with hands-free profile function.
- For headsets which are both in the headset profile.
- Color: Grey/Black

E11

Key Features

- Continuous Talk Time: 9 hours
- StandbyTime: 400 hours (16 days)
- Weight: 14 g
- Voice Dial
- Redial Last Number1
- Call Muting
- Multi Pairing2
- Fast Charge 2 hours
- Reversible hook with anti allergic soft material for long hold.
- Bluetooth v 1.2 headset and hands-free profile compatible.
- For phones with hands-free profile function.
- For headsets which are both in the headset profile.

High-Speed Micro-Coax Cable Assembly (MCC)

Features

- Thin cable thickness and fine pitch can save room for application.
- Multi-position can transfer 5 to 25 pairs of signal.
- High soldering quality makes high performance connect between cable and contact. Tyco Electronics has special know-how for whole assembly process.
- Tyco Electronics design the connectors by herself.

Connector

No. of Positions:
10, 17, 20, 30, 40, 44, 50 pos. are available to use.

Pitch:
0.4, 0.5, 0.6, 1.0 mm pitch are available.

Direction:
Straight and 90 degree are available.

Cable

Gage:
30, 32, 36, 40, 42 AWG cables are available.

Pairs:
Single and Twin-Coax cables are available.

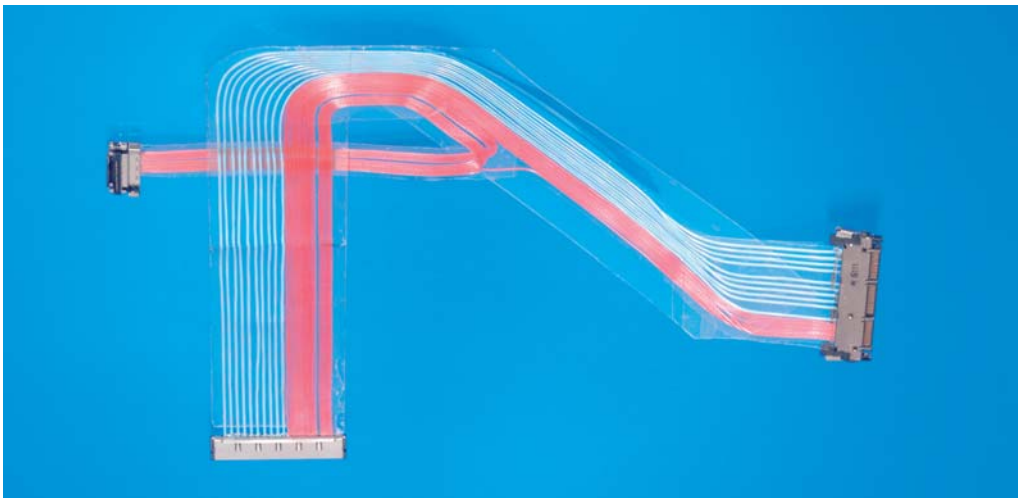

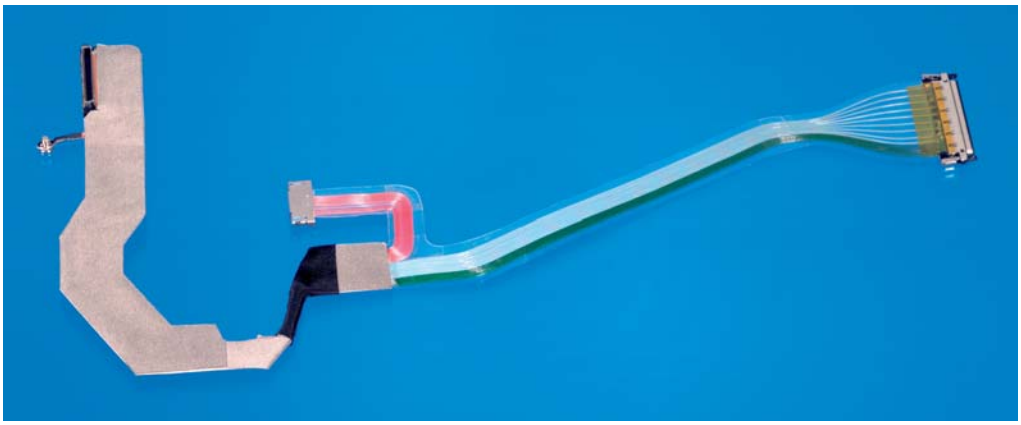

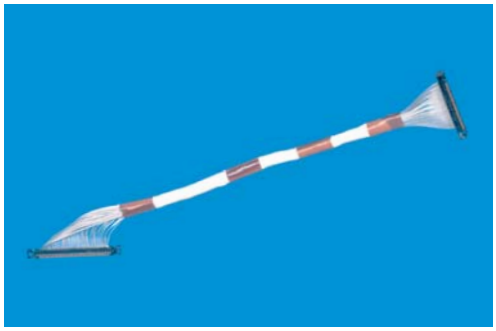

Micro-Coax Cable Assembly

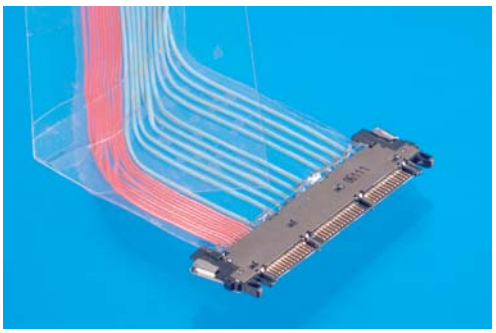

Connectors

All specifications subject to change. Consult Tyco Electronics for latest specifications.

The Leading Edge in Custom Power Solutions

Designing and Building Battery Systems for Technology

Tyco Electronics Battery Systems (TEBS) is a worldwide leader in the design and manufacture of custom battery packs and systems for any portable electronic device or stationary back-up power. A battery system is much more than a collection of cells. It is the source of the power that enables your products to their fullest potential.

When you specify TEBS, you're getting a dedicated team of innovative designers, trained to devise the perfect solution within your power, space, weight and cost parameters.

From Concept Through Total Design

TEBS' worldwide engineering design team incorporates electrical, mechanical and chemical expertise to shorten the time required for design and development, ultimately reducing product delivery times. Our cutting edge technology can increase functionality while reducing size, weight and cost. TEBS has the ability to offer a turnkey design and manufacturing solution to match the battery system to the specifications of your products.

Our unique program management system gives you a champion inside TEBS, charged with supervising the design process from concept through finished product. When you specify TEBS, you are buying the power to bring innovations to market, on time.

Design Innovation

With the goal of maximising compatibility with your product, our mechanical and electrical design team will use creativity and technology to provide the optimum solution. Our engineering and technical sales personnel are experienced in solving complex problems, validating the design steps to ensure downstream performance, and developing quality designs that work. TEBS' innovations deliver everything needed to get to market sooner, with an added competitive edge.

From Concept Through Total Design

At TEBS, we provide powerful solutions for a wide range of OEM applications, including:

- Cellular Telephones
- Laptop Computers & PDA's
- Power Back-Up (i.e. Mass Data Storage Units)
- Digital Still & Video Cameras
- Two-Way Radios
- Data Acquisition
- Test Equipment
- Medical Applications
- Handheld P.O.S. & GPS
- Outdoor Telecom UPS

Core Manufacturing Processes

Cost effective and flexible manufacturing methods are at the core of TEBS' working methodology. Incorporating advanced production techniques and the most reliable and efficient equipment available in both manual and automated processes. TEBS' production techniques ensure the consistency and high performance of the finished product.

Flexible, future proof processes allow large volume manufacturing capacities and a higher degree of repeatability in both quality and quantity of products. Integrating the best in both design and assembly, TEBS gives you a world-class combination in both service and technology.

Testing and Qualification

With a fully integrated professional battery pack and cell testing facility in Shanghai, China, TEBS provides complete in-house component and battery pack approval, typically covering cell, PCB and full product assemblies. Testing includes pre-compliance and planned compliance testing in safety, abuse, EMC, environmental reliability, performance and life testing through internal, customer and regulatory specifications and standards.

In Shanghai, an array of environmental chambers, cell and pack cycling channels and other specialized equipment is housed in over 6,000 square feet of dedicated testing space. These unique independent testing capabilities offer our customers the ability to complete all of their required specification and environmental testing under one roof and enables TEBS to offer the complete turnkey power solution.

The lab is approved by UL to conduct UL1642 and UL2054 testing and issue certification to both standards. TEBS also has senior level representation on the UL Standards Technical Panel (UL1642 & UL2054) and IEEE-P1725 Work Group. TEBS has the additional capability to conduct all UN/DoT testing in-house and provide the required certification documents.

Global Commitment

TEBS' world-wide engineering design team incorporates electrical, mechanical and chemical expertise to shorten the time required for design and development, ultimately reducing product delivery times. Our cutting edge technology can increase functionality while reducing size, weight and cost.

TEBS has the ability to offer a turnkey design and manufacturing solution to match the battery system to the specifications of your products. Our unique program management system gives you a champion inside TEBS, charged with supervising the design process from concept through finished product.

When you specify TEBS, you are buying the power to bring innovations to market, on time.

All specifications subject to change. Consult Tyco Electronics for latest specifications.

Mechatronic Center Niefern

Advanced Tyco Electronics technologies allow us to produce highly competitive semi-finished products for card manufacturers of the 1st, 2nd and 3rd generation.

- High-Speed Stamping
- Selective Plating
- Laminating
- Reel-to-Reel Over-Molding

The products are delivered on a reel and can be used for chip mounting by our customers.

Reel-to-Reel Stamping

- High-speed stamping
- 4 fold stamping tool, 70 mm width
- Material: Copper alloy

Reel-to-Reel Plating

- Plating in 70 mm width
- Selective Metalization:
  - Overall Ni
  - Contacts Side:
    - Spots on contact area
    - Gold flash
  - Bonding Side:
    - Strips or Spots
- Slitting in 35 mm

Reel-to-Reel Lamination

- Clean room class 100,000
- High accuracy dielectric stamping
- Mechanical alignment and prefixing of dielectric
- Leadframe roll lamination
- 100 % video control

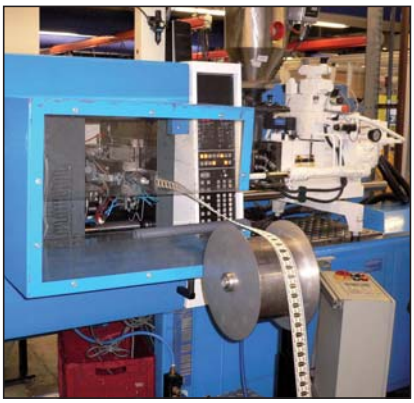

Reel-to-Reel Over-Molding

- Free cutting in line
- Multiple cavities mold

Bonding Capability Guaranty

LAMFRAME

Key Features

- Low cost tape for memory and microprocessor applications
- Compatible with industry standard processes
- Allow wide range of dielectric (type and thickness)
- Optimisation of dielectric area for cost reduction
- Minimum Slit Size: 0.15 mm

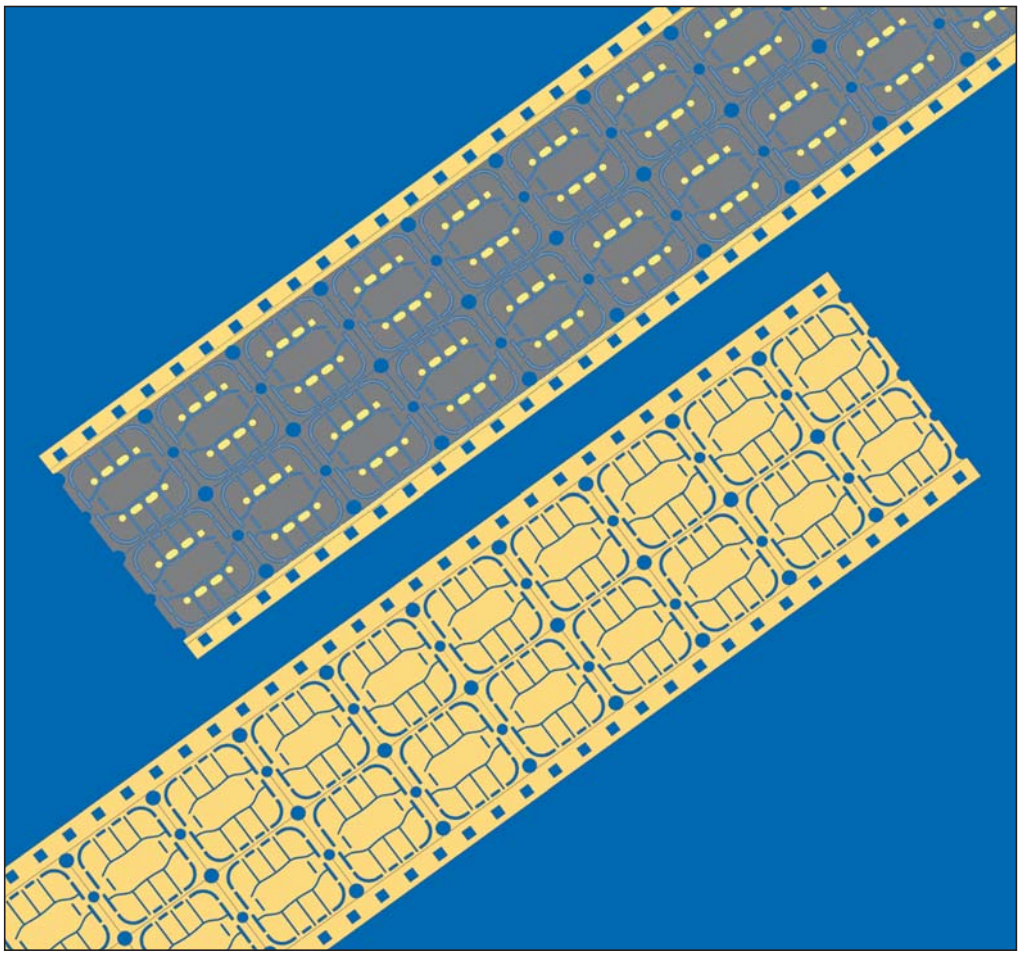

This technology allows Tyco Electronics to offer a wide range of products for memory and microprocessor smart cards with:

- Plating Finishes
  - Gold
  - “Grey like” plating
- Dielectric
  - Polyimide
  - Glass epoxy
  - Polyester
  - …
- Customized thickness
- Disconnection option

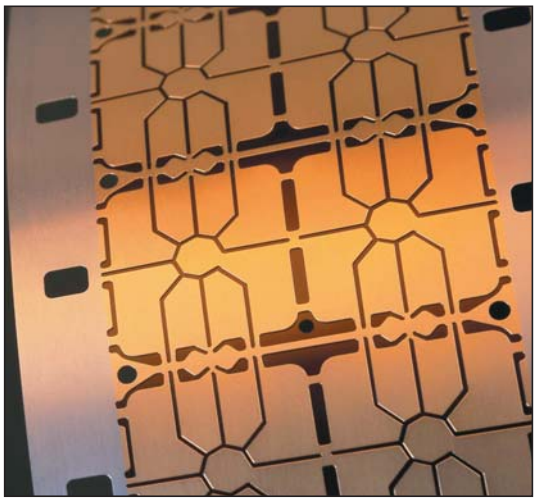

Lamination process is carried out in a clean room to avoid any outside contamination.

Tyco Electronics is able to perform bonding tests with gold or aluminium wires during design phase but also to ensure the quality during all the life time of the products.

Products are today customer specific, Tyco Electronics Open Design available.

All specifications subject to change. Consult Tyco Electronics for latest specifications.

Mini SIM Card Packaging

Tyco Electronics propose a new Packaging for the 3rd Generation of SIM Cards

The leadframe is over moulded with a plastic package at dimension close to the final Mini SIM card body.

This technology allows our customers to work directly on advanced product and use their standard available reel-to-reel equipments.

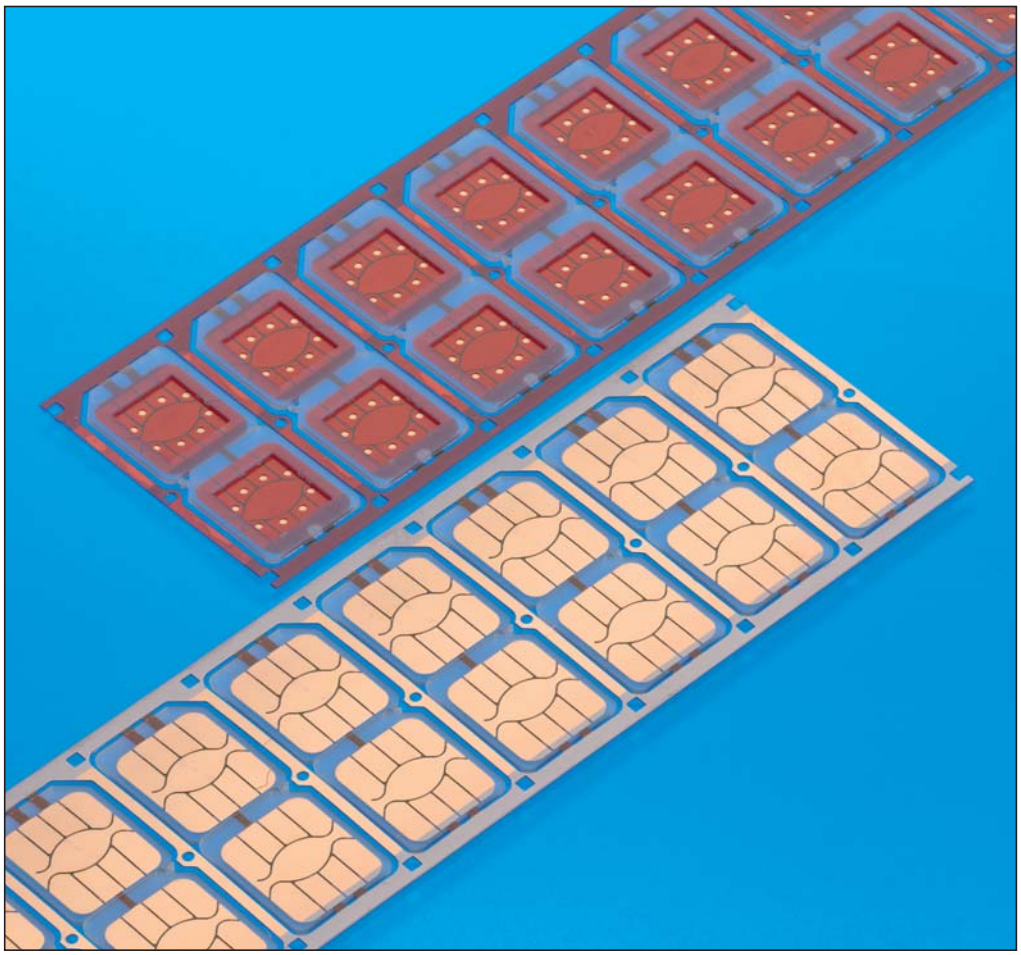

Key Features

- Microelectronic can be made on semi final packaging, no module out cutting and embedding operation.
- Lower risk and process time improvement.
- Personalisation can be realized separately on tapes, and bring together by a final operation.
- No additional card body is needed, but also possibility to plug in 1st or 2nd card body generation.

Produced with the Standard Tyco Electronics Technologies

- High-speed stamping
- Selective plating
- Laminating
- Reel-to-reel over moulding

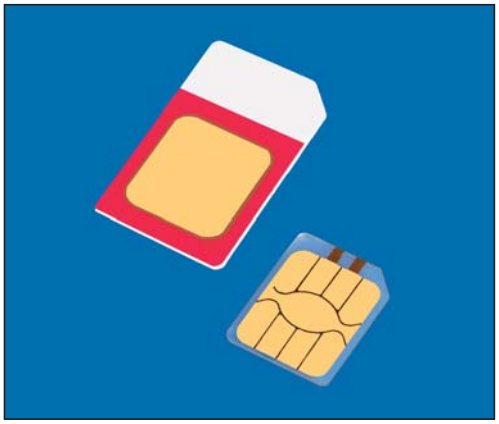

GaAs SP6T 2.5 V Power Switch

Features

M/A-COM's MASWSS0091 is a GaAs PHEMT MMIC single pole six throw (SP6T) high power switch die. This switch is ideally suited for applications where high power, low control voltage, low insertion loss, high isolation, small size and low cost are required.

The MASWSS0091 is designed for dual-, tri-, and quad-band GSM and DCS/PCS handset systems that connect separate transmit and receive functions to a common antenna, and can be used in all systems operating up to 2.5 GHz requiring high power at low control voltage.

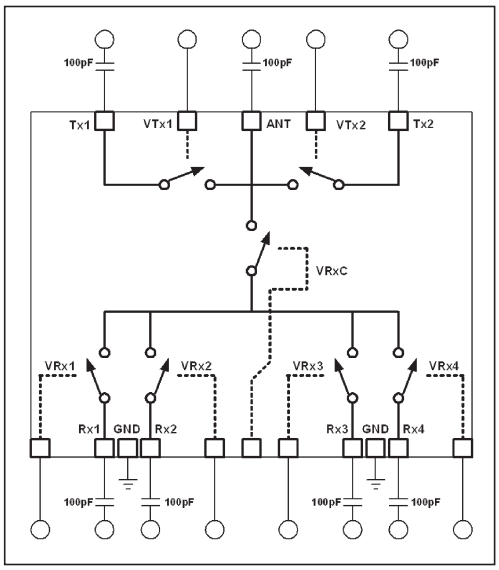

Functional Schematic

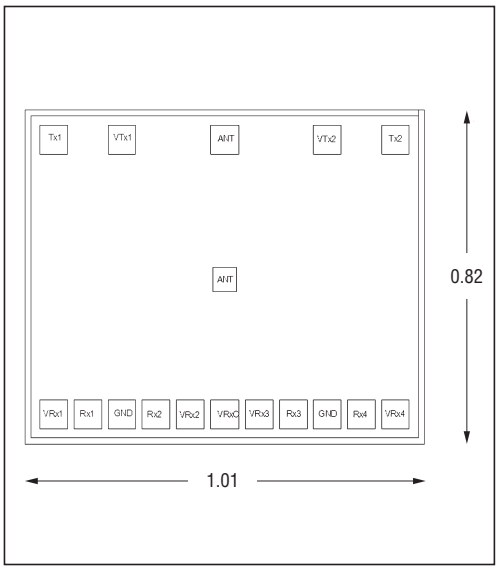

Die Layout

GaAs SP3T 2.6 V CDMA/GPS Switch

Features

M/A-COM's MASWSS0191 is an industry leading GaAs PHEMT MMIC single pole three throw (SP3T) CDMA-GPS switch in a 2 mm 8-lead STDFN package.

The MASWSS0191 is uniquely configured to enable switching from a common antenna port to CDMA cellular, CDMA PCS, or GPS ports. The design is asymmetric and has been fully optimized for excellent cross modulation performance in CELL and PCS paths while still maintaining excellent insertion loss and isolation. The MASWSS0191 is fabricated using a 0.5 micron gate length GaAs PHEMT process. The process features full passivation for performance and reliability.

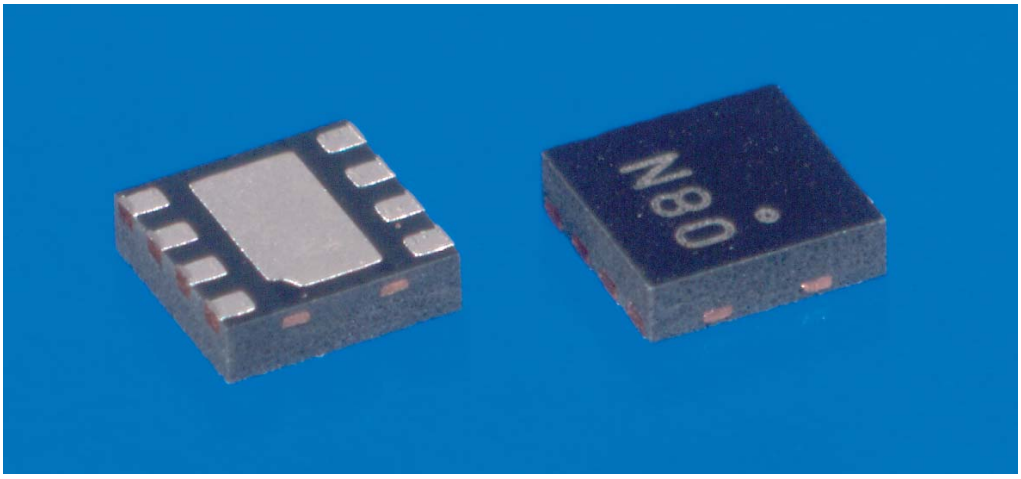

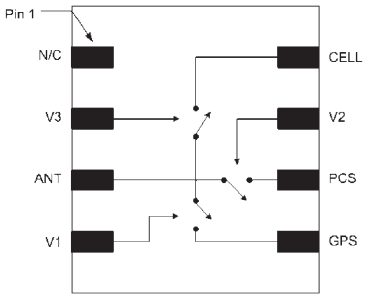

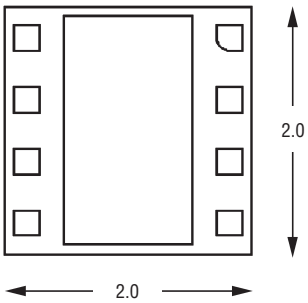

Functional Schematic

All specifications subject to change. Consult Tyco Electronics for latest specifications.

Lithium Cells and Battery Packs

External shorts, runaway charging conditions, or abusive charging can cause considerable damage to primary and secondary lithium cells. Rechargeable lithium batteries are used in notebook computers and cellular phones as well as other portable electronic applications.

Product Series:
LR4, LTP, SRP, VLR, VTP

Typical Rechargeable Lithium Battery Pack Circuit

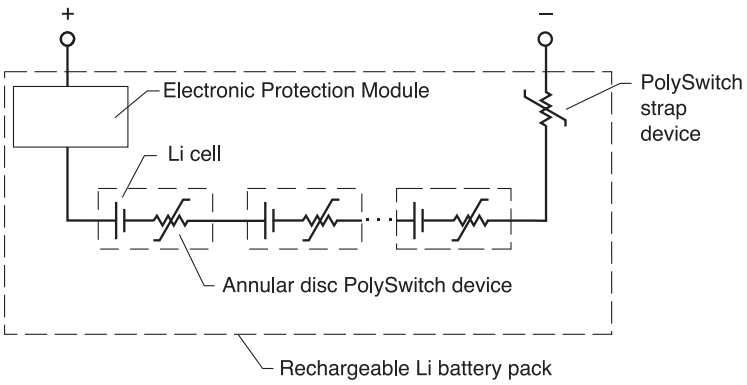

Rechargeable Battery Pack Protection

Due to external shorts, run-away charging conditions, or abusive charging, considerable damage can be sustained in both battery cells and pack surroundings. The most common applications are nickel-cadmium (NiCd), nickel-metal-hydride (NiMH), and lithium-ion (Li-ion) battery packs for cellular phones, laptop/notebook computers, and other portable electronic applications.

Product Series:
LR4, LTP, SRP, VLR, VLP, VTP

NiMH/NiCd Battery Pack Circuit Diagram

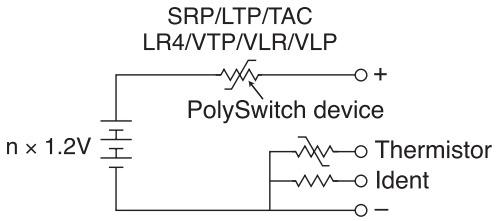

Single Cell Li-ion/Li-Polymer Battery Pack Circuit Diagram

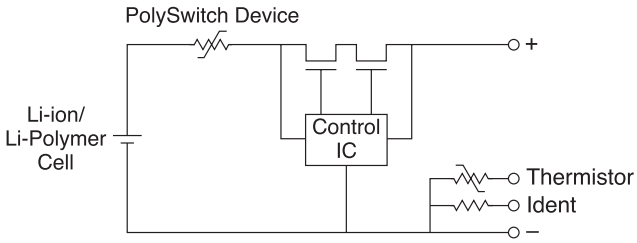

All specifications subject to change. Consult Tyco Electronics for latest specifications.

Portable Electronics Input Port Protection

The use of an incorrect or faulty adapter/charger can irreparably damage unprotected portable electronics equipment. Typical applications include cellular phones, PDAs, and digital cameras.

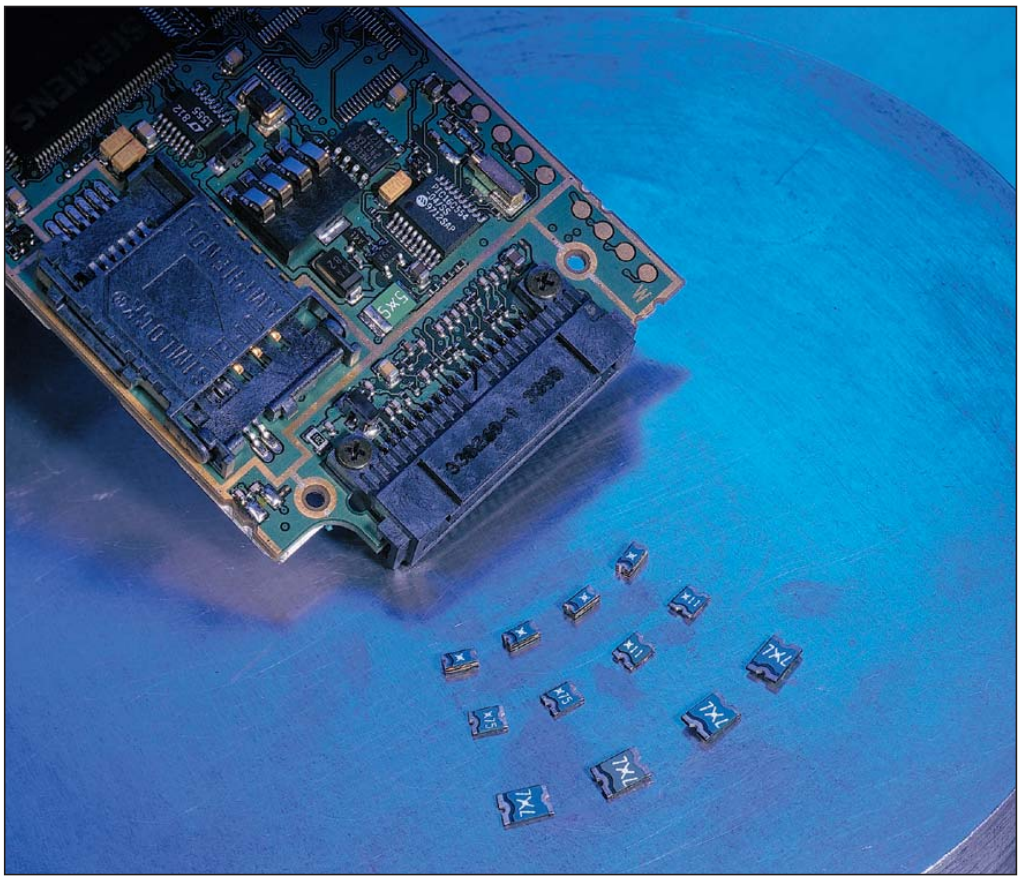

Product Series:
nanoSMD, microSMD, miniSMD

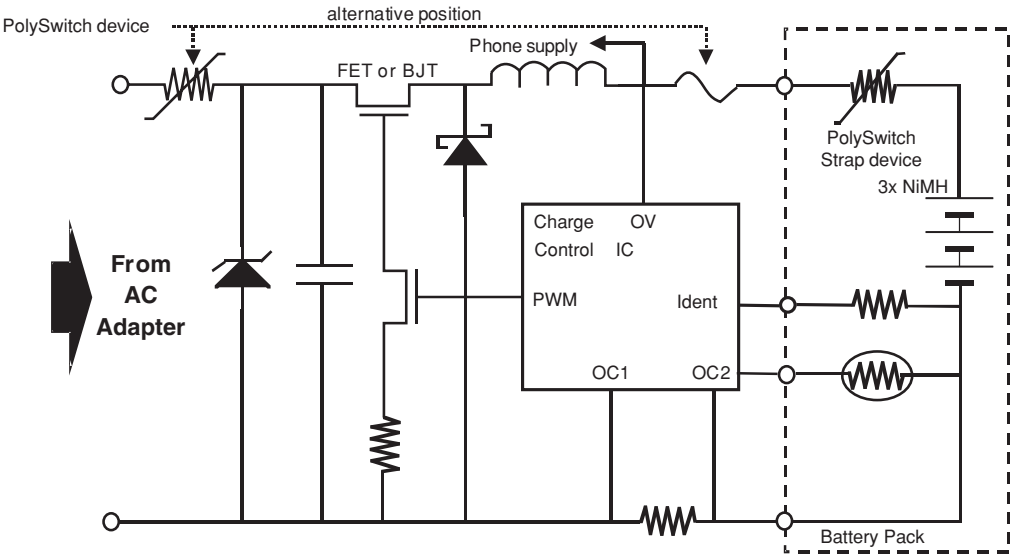

HDMI: LCD, Plasma, HDTV, Set-Top Box, DVD Player

HDMI (High Definition Multi-media Interface) applications such as LCD displays, Plasma displays, High Definition Tele-vision set-top boxes, and DVD players are susceptible to electrostatic discharge. To help protect the high speed TNDS lines against ESD hits PESD devices are used, two per line.

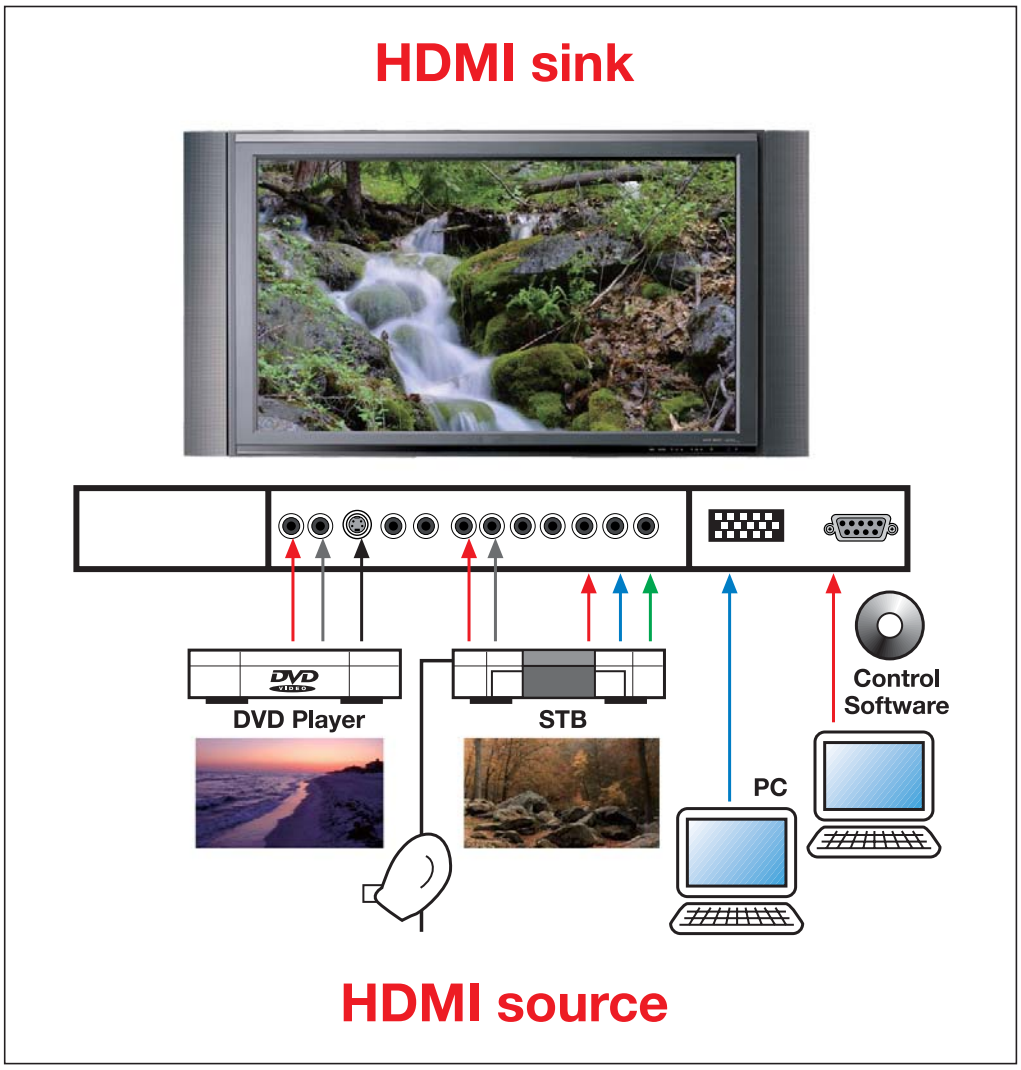

Product Series:
PESD

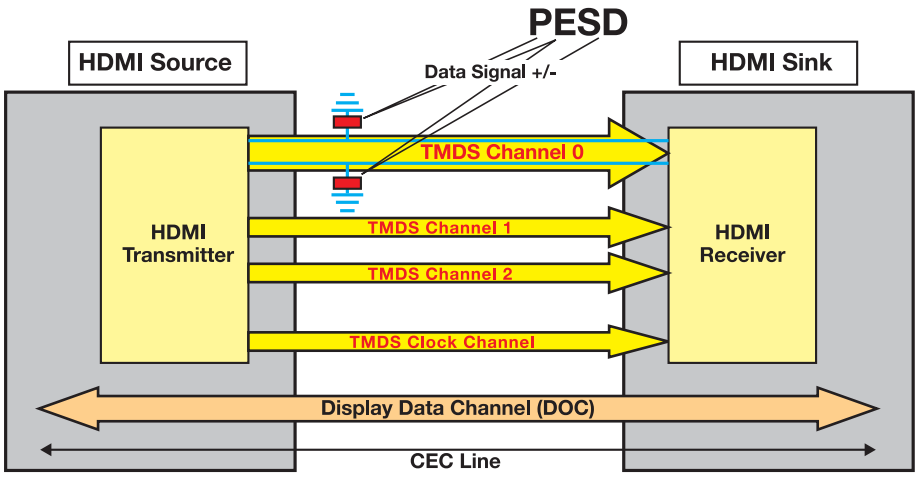

All specifications subject to change. Consult Tyco Electronics for latest specifications.

Strap Battery Devices – VLR Series

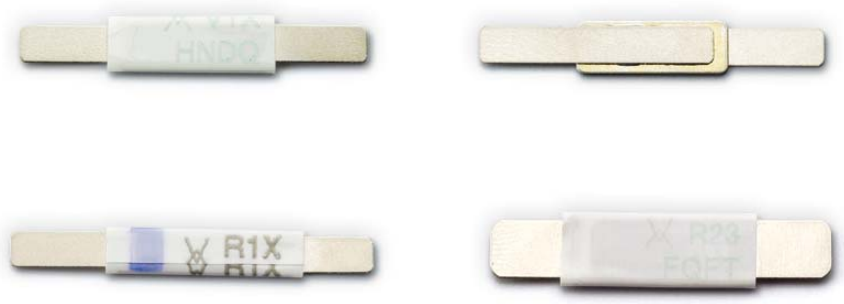

Features

- Current ratings from 1.7 A to 2.3 A
- Voltage: 12 V
- Agency Recognition: UL, CSA, TÜV
- Fast time-to-trip
- Low resistance

Lead Material:

0.125 mm nominal thickness, quarter-hard nickel

Tape Material:

Polyester

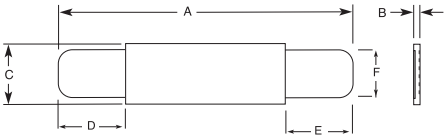

Figure B1

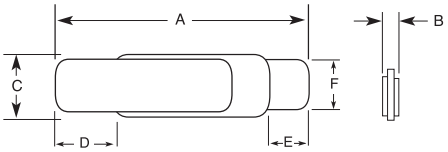

Figure B2

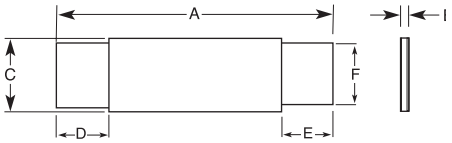

Figure B3

Part Number	Dimensions (mm)												Figure
	A		B		C		D		E		F		
	Min.	Max.	Min.	Max.	Min.	Max.	Min.	Max.	Min.	Max.	Min.	Max.	
85 °C Typical Activation VLR													
VLR170F	20.8	23.2	–	0.8	3.5	3.9	4.5	6.5	4.5	6.5	2.4	2.6	B1
VLR170LF	38.8	41.2	–	0.8	3.5	3.9	8.7	10.3	18.7	20.3	2.4	2.6	B1
VLR170UF	20.8	23.2	–	0.7	3.5	3.7	5.3	6.7	5.3	6.7	2.4	2.6	B2
VLR175F	23.0	24.5	–	0.8	2.9	3.3	4.7	7.2	3.8	5.4	2.4	2.6	B1
VLR175LF	29.3	31.7	–	0.8	2.9	3.3	5.2	6.8	10.0	12.5	2.4	2.6	B1
VLR175UF	23.0	24.5	–	0.7	2.9	3.1	5.2	7.5	4.3	5.7	2.4	2.6	B2
VLR230F	20.9	23.1	–	0.8	4.9	5.3	4.1	5.8	4.1	5.8	3.9	4.1	B1
VLR230F-C36	25.3	27.7	–	0.8	3.5	3.9	3.5	5.7	3.5	5.7	2.9	3.1	B3
VLR230SUF	20.9	23.1	–	0.7	4.9	5.1	4.1	6.0	4.1	6.0	3.9	4.1	B2

Strap Battery Devices – VLP Series

Features

- Current ratings from 2.1 A to 2.7 A
- Voltage: 16 V
- Agency Recognition: UL, CSA, TÜV
- Fast time-to-trip
- Low resistance

Lead Material:
0.125 mm nominal thickness, quarter-hard nickel

Tape Material:
Polyester

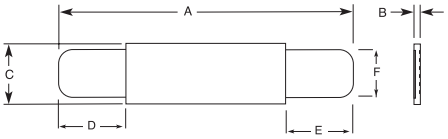

Figure B4

Part Number	Dimensions (mm)												Figure
	A		B		C		D		E		F		
	Min.	Max.	Min.	Max.	Min.	Max.	Min.	Max.	Min.	Max.	Min.	Max.	
90 °C Typical Activation VLP													
VLP220F	21.1	23.3	0.6	0.8	3.5	3.9	5.1	6.8	5.1	6.8	2.9	3.1	B4
VLP270F	20.9	23.1	0.6	0.8	4.9	5.3	4.1	5.8	4.1	5.8	3.9	4.1	B4

All specifications subject to change. Consult Tyco Electronics for latest specifications.

Strap Battery Devices – VTP Series

Features

- Current ratings from 1.1 A to 2.4 A
- Voltage: 16 V
- Agency Recognition: UL, CSA, TÜV
- Fast time-to-trip
- Low resistance

Lead Material:

0.125 mm nominal thickness, quarter-hard nickel

Tape Material:

Polyester

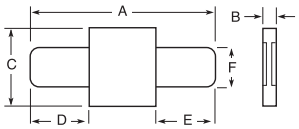

Figure B5

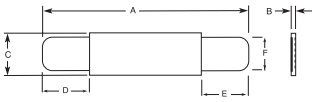

Figure B6

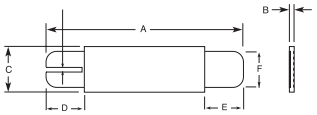

Figure B7

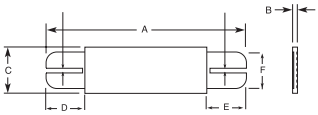

Figure B8

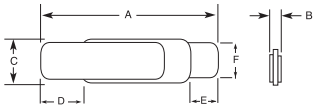

Figure B9

Part Number	Dimensions (mm)												Figure
	A		B		C		D		E		F		
	Min.	Max.	Min.	Max.	Min.	Max.	Min.	Max.	Min.	Max.	Min.	Max.	
90 °C Typical Activation VTP													
VTP110F	23.6	25.6	–	0.7	2.7	2.9	7.0	8.0	7.0	8.0	2.3	2.5	B9
VTP170F	15.4	17.5	0.5	0.8	7.0	7.4	4.0	6.2	4.0	6.2	3.9	4.1	B5
VTP170XF	20.9	22.9	0.5	0.8	4.9	5.3	6.0	8.6	6.0	8.6	3.9	4.1	B6
VTP170XSF	20.9	22.9	0.5	0.8	4.9	5.3	6.0	8.6	6.0	8.6	3.9	4.1	B7
VTP175F	21.2	23.2	–	0.8	3.5	3.9	4.6	6.6	4.6	6.6	2.9	3.1	B6
VTP175LF	25.8	28.2	–	0.8	3.5	3.9	5.7	7.3	8.7	10.3	2.4	2.6	B6
VTP175UF	21.2	23.2	–	0.7	3.5	3.7	5.6	6.8	5.6	6.8	2.9	3.1	B9
VTP200GF	20.9	23.1	–	0.8	4.1	4.5	3.0	4.8	3.0	4.8	2.9	3.1	B6
VTP200UF	20.9	23.1	–	0.7	4.1	4.3	4.0	5.4	4.0	5.4	2.9	3.1	B9
VTP210GF	20.9	23.1	0.6	0.8	4.9	5.3	4.1	5.8	4.1	5.8	3.9	4.1	B6
VTP210SF	20.9	23.1	0.6	0.8	4.9	5.3	4.1	5.8	4.1	5.8	3.9	4.1	B7
VTP210SLF	29.0	32.0	0.6	0.8	4.9	5.3	3.5	5.8	12.5	14.5	3.9	4.1	B7
VTP210SSF	20.9	23.1	0.6	0.8	4.9	5.3	4.1	5.8	4.1	5.8	3.9	4.1	B8
VTP240F	23.8	26.2	–	0.8	4.9	5.3	3.5	5.7	3.5	5.7	3.9	4.1	B6

Strap Battery Devices – LTP Series

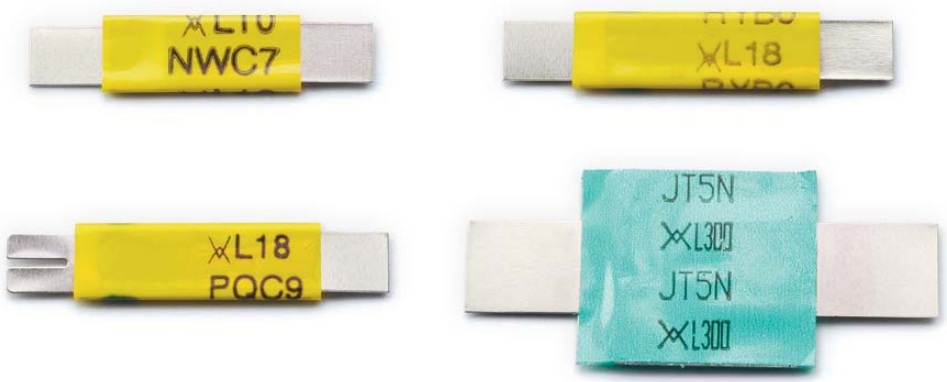

Features

- Current ratings from 0.7 A to 3.4 A
- Voltage: 15 V to 25 V
- Agency Recognition: UL, CSA, TÜV
- Fast time-to-trip
- Low resistance

Lead Material:

0.125 mm nominal thickness, quarter-hard nickel

Tape Material:

Polyester

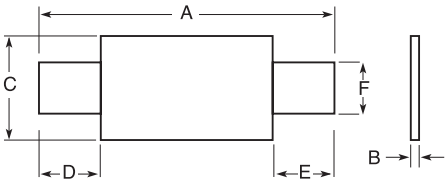

Figure B10

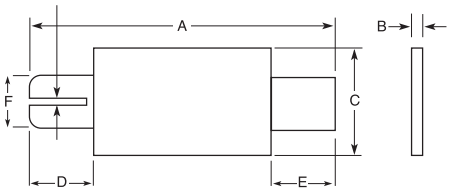

Figure B11

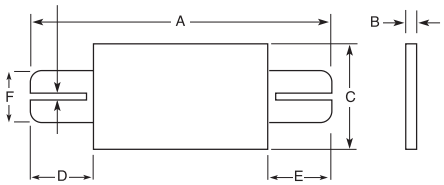

Figure B12

Part Number	Dimensions (mm)												Figure
	A		B		C		D		E		F		
	Min.	Max.	Min.	Max.	Min.	Max.	Min.	Max.	Min.	Max.	Min.	Max.	
110 °C Typical Activation LTP													
LTP070F	19.9	22.1	0.7	1.2	4.9	5.2	5.5	7.5	5.5	7.5	3.9	4.1	B10
LTP070SF	19.9	22.1	0.7	1.2	4.9	5.2	5.5	7.5	5.5	7.5	3.9	4.1	B11
LTP100F	20.9	23.1	0.6	1.0	4.9	5.2	4.1	5.5	4.1	5.5	3.9	4.1	B10
LTP100SF	20.9	23.1	0.6	1.0	4.9	5.2	4.1	5.5	4.1	5.5	3.9	4.1	B11
LTP100SLF	29.0	32.0	0.6	1.0	4.9	5.2	3.5	5.5	12.5	14.5	3.9	4.1	B11
LTP100SSF	20.9	23.1	0.6	1.0	4.9	5.2	4.1	5.5	4.1	5.5	3.9	4.1	B12
LTP180F	24.0	26.0	0.6	1.0	4.9	5.2	4.1	5.5	4.1	5.5	3.9	4.1	B10
LTP180LF	35.5	37.5	0.6	1.0	4.9	5.2	9.7	11.0	9.7	11.0	3.9	4.1	B10
LTP180SF	24.0	26.0	0.6	1.0	4.9	5.2	4.1	5.5	4.1	5.5	3.9	4.1	B11
LTP190F	21.3	23.4	0.5	1.1	10.2	11.0	5.0	7.6	5.0	7.6	4.8	5.4	B10
LTP260F	24.0	26.0	0.6	1.0	10.8	11.9	5.0	7.0	5.0	7.0	5.9	6.1	B10
LTP300F	28.4	31.8	0.5	1.1	13.0	13.5	6.3	8.9	6.3	8.9	6.0	6.6	B10
LTP340F	24.0	26.0	0.6	1.0	14.8	15.9	4.0	5.0	4.0	5.0	5.9	6.1	B10

All specifications subject to change. Consult Tyco Electronics for latest specifications.

Strap Battery Devices – LR4 Series

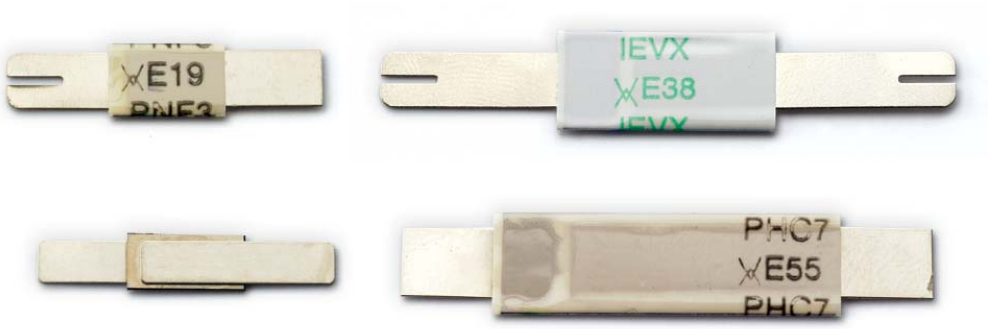

Features

- Current ratings from 1.7 A to 14.1 A
- Voltage: 15 V to 20 V
- Agency Recognition: UL, CSA, TÜV
- Fast time-to-trip
- Low resistance

Lead Material:
0.125 mm nominal thickness, quarter-hard nickel

Tape Material:
Polyester

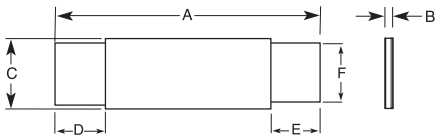

Figure B13

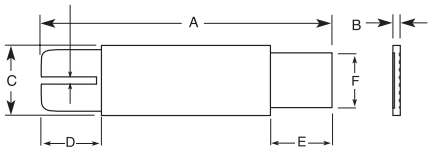

Figure B14

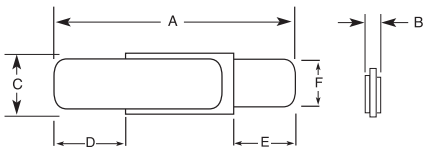

Figure B15

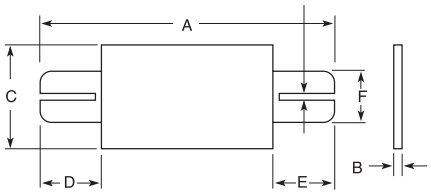

Figure B16

Part Number	Dimensions (mm)												Figure
	A		B		C		D		E		F		
	Min.	Max.	Min.	Max.	Min.	Max.	Min.	Max.	Min.	Max.	Min.	Max.	
125 °C Typical Activation LR4													
LR4-170UF	19.0	21.0	0.5	0.7	3.8	4.0	5.3	6.5	5.3	6.5	2.9	3.1	B15
LR4-190F	19.9	22.1	0.6	1.0	4.9	5.5	5.5	7.5	5.5	7.5	3.9	4.1	B13
LR4-190SF	19.9	22.1	0.6	1.0	4.9	5.5	5.5	7.5	5.5	7.5	3.9	4.1	B14
LR4-260F	20.9	23.1	0.6	1.0	4.9	5.5	4.1	5.5	4.1	5.5	3.9	4.1	B13
LR4-260SF	20.9	23.1	0.6	1.0	4.9	5.5	4.1	5.5	4.1	5.5	3.9	4.1	B14
LR4-380F	24.0	26.0	0.6	1.0	6.9	7.5	4.1	5.5	4.1	5.5	4.9	5.1	B13
LR4-380XF	32.2	35.8	0.6	1.0	4.9	5.5	5.5	7.5	5.5	7.5	3.9	4.1	B13
LR4-450F	24.0	26.0	0.6	1.0	9.9	10.5	5.3	6.7	5.3	6.7	5.9	6.1	B13
LR4-550F	35.0	37.0	0.6	1.0	6.9	7.5	5.3	6.7	5.3	6.7	4.9	5.1	B13
LR4-600F	24.0	26.0	0.6	1.0	13.9	14.5	4.1	5.5	4.1	5.5	5.9	6.1	B13
LR4-600XF	40.5	42.7	0.6	1.0	6.9	7.5	5.2	6.8	5.2	6.8	4.9	5.1	B13
LR4-730F	27.1	29.1	0.6	1.0	13.9	14.5	4.1	5.5	4.1	5.5	5.9	6.1	B13
LR4-880SSF	62.8	65.2	0.6	1.0	7.9	8.5	10.0	12.0	10.0	12.0	5.9	6.1	B16
LR4-900F	45.4	47.6	0.9	1.3	7.9	8.5	4.6	6.2	4.6	6.2	5.9	6.1	B13
LR4-1300SSF	61.5	66.5	0.9	1.3	9.4	10.0	5.0	7.5	5.0	7.5	5.9	6.1	B16

Strap Battery Devices – SRP Series

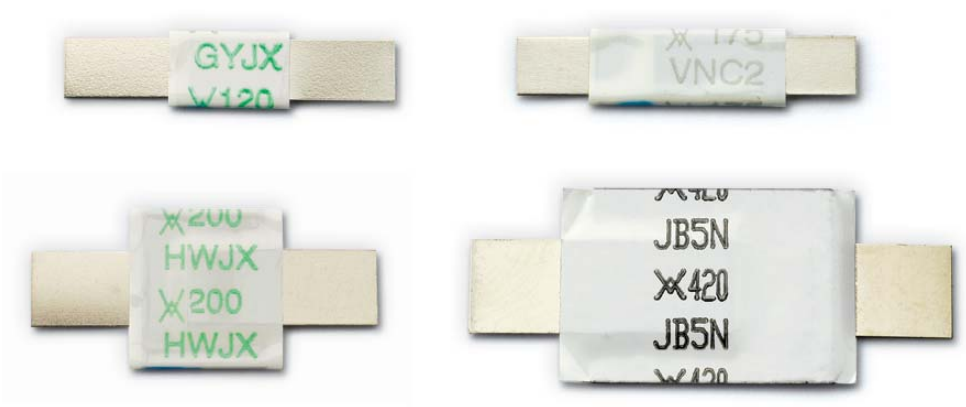

Features

- Current ratings from 1.2 A to 4.2 A
- Voltage: 15 V to 30 V
- Agency Recognition: UL, CSA, TÜV
- Fast time-to-trip
- Low resistance

Lead Material:

0.125 mm nominal thickness, quarter-hard nickel

Tape Material:

Polyester

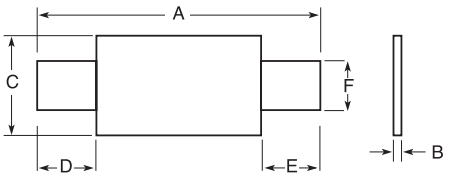

Figure B17

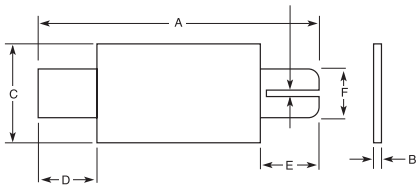

Figure B18

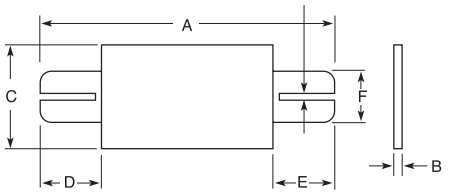

Figure B19

Part Number	Dimensions (mm)												Figure
	A		B		C		D		E		F		
	Min.	Max.	Min.	Max.	Min.	Max.	Min.	Max.	Min.	Max.	Min.	Max.	
SRP													
SRP120F	19.9	22.1	0.6	1.0	4.9	5.2	5.5	7.5	5.5	7.5	3.9	4.1	B17
SRP120LF	24.9	27.1	0.6	1.0	4.9	5.2	5.5	7.5	10.5	12.5	3.9	4.1	B17
SRP120SF	19.9	22.1	0.6	1.0	4.9	5.2	5.5	7.5	5.5	7.5	3.9	4.1	B18
SRP175F	20.9	23.1	0.6	1.0	4.9	5.2	4.1	5.5	4.1	5.5	3.9	4.1	B17
SRP175LF	29.9	32.1	0.6	1.0	4.9	5.2	5.5	7.5	10.5	12.5	3.9	4.1	B17
SRP175SF	20.9	23.1	0.6	1.0	4.9	5.2	4.1	5.5	4.1	5.5	3.9	4.1	B18
SRP175SSF	20.9	23.1	0.6	1.0	4.9	5.2	4.1	5.5	4.1	5.5	3.9	4.1	B19
SRP200F	21.3	23.4	0.5	1.1	10.2	11.0	5.0	7.6	5.0	7.6	4.8	5.4	B17
SRP350F	28.4	31.8	0.5	1.1	13.0	13.5	6.3	8.9	6.3	8.9	6.0	6.6	B17
SRP420F	30.6	32.4	0.5	1.1	12.9	13.6	5.0	7.5	5.0	7.5	6.0	6.7	B17

All specifications subject to change. Consult Tyco Electronics for latest specifications.

Surface-Mount Devices – nanoSMDC

Features

- Broadest range of resettable devices available in the industry
- Current ratings from 0.12 A to 2 A
- Voltage ratings from 6 V to 48 V
- Agency Recognition: UL, CSA, TÜV
- Fast time-to-trip
- Low resistance

Terminal Pad Material:

100 % matte tin with nickel underplate

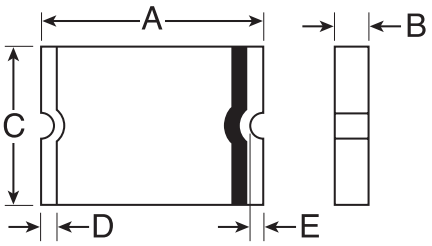

Figure S1

Part Number	Dimensions (mm)												Figure
	A		B		C		D		E		F		
	Min.	Max.	Min.	Max.	Min.	Max.	Min.	Max.	Min.	Max.	Min.	Max.	
nanoSMP Series Size 3216 mm/1206 mils													
nanoSMDC012F	3.00	3.40	0.62	1.00	1.37	1.80	0.25	0.75	0.08	–	–	–	S1
nanoSMDC016F	3.00	3.40	0.62	1.00	1.37	1.80	0.25	0.75	0.08	–	–	–	S1
nanoSMDC020F	3.00	3.40	0.38	0.64	1.37	1.80	0.25	0.75	0.08	–	–	–	S1
nanoSMDC035F	3.00	3.40	0.38	0.64	1.37	1.80	0.25	0.75	0.08	–	–	–	S1
nanoSMDC050F/13.2	3.00	3.40	0.38	0.64	1.37	1.80	0.25	0.75	0.08	–	–	–	S1
nanoSMDC075F	3.00	3.40	0.28	0.48	1.37	1.80	0.25	0.75	0.08	–	–	–	S1
nanoSMDC110F	3.00	3.40	0.67	1.00	1.37	1.80	0.25	0.75	0.08	–	–	–	S1
nanoSMDC150F	3.00	3.40	0.55	0.89	1.37	1.80	0.25	0.75	0.08	–	–	–	S1
nanoSMDC200F	3.00	3.40	0.68	1.25	1.37	1.80	0.25	0.75	0.08	–	–	–	S1

Surface-Mount Devices – microSMD

Features

- Broadest range of resettable devices available in the industry
- Current ratings from 0.05 A to 1.75 A
- Voltage ratings from 6 V to 30 V
- Agency Recognition: UL, CSA, TÜV
- Small footprint
- Fast time-to-trip
- Low resistance

Terminal Pad Material:

100 % matte tin with nickel underplate

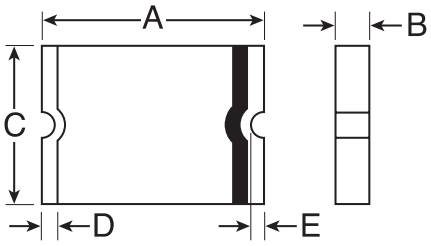

Figure S2

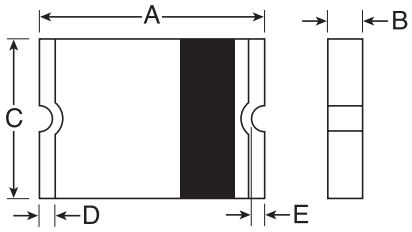

Figure S3

Part Number	Dimensions (mm)												Figure
	A		B		C		D		E		F		
	Min.	Max.	Min.	Max.	Min.	Max.	Min.	Max.	Min.	Max.	Min.	Max.	
microSMD Series Size 3225 mm/1210 mils													
microSMD005F	3.00	3.43	0.50	0.85	2.35	2.80	0.25	0.75	0.20	–	–	–	S3
microSMD010F	3.00	3.43	0.50	0.85	2.35	2.80	0.25	0.75	0.20	–	–	–	S2
microSMD035F	3.00	3.43	0.38	0.62	2.35	2.80	0.25	0.75	0.20	–	–	–	S2
microSMD050F	3.00	3.43	0.38	0.62	2.35	2.80	0.25	0.75	0.20	–	–	–	S2
microSMD075F	3.00	3.43	0.38	0.62	2.35	2.80	0.25	0.75	0.20	–	–	–	S2
microSMD110F	3.00	3.43	0.28	0.48	2.35	2.80	0.25	0.75	0.20	–	–	–	S2
microSMD150F	3.00	3.43	0.51	1.22	2.35	2.80	0.25	0.75	0.20	–	–	–	S2
microSMD175F	3.00	3.43	0.40	0.76	2.35	2.80	0.25	0.75	0.20	–	–	–	S2

All specifications subject to change. Consult Tyco Electronics for latest specifications.

Surface-Mount Devices – miniSMDC

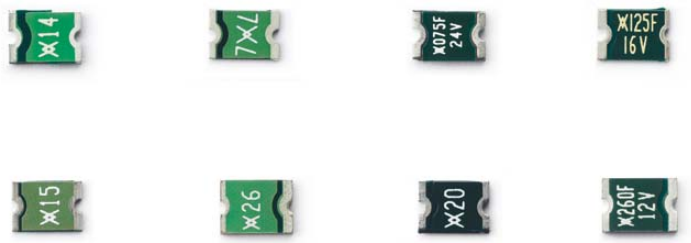

Features

- Broadest range of resettable devices available in the industry
- Current ratings from 0.14 A to 2.6 A
- Voltage ratings from 6 V to 60 V
- Agency Recognition: UL, CSA, TÜV
- Small footprint
- Fast time-to-trip
- Low resistance

Terminal Pad Material:

100 % matte tin with nickel underplate

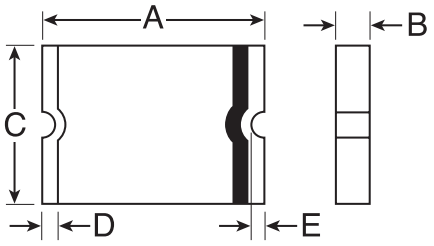

Figure S4

Part Number	Dimensions (mm)												Figure
	A		B		C		D		E		F		
	Min.	Max.	Min.	Max.	Min.	Max.	Min.	Max.	Min.	Max.	Min.	Max.	
miniSMDC Series Size 4532 mm/1812 mils													
miniSMDC014F	4.37	4.73	0.635	0.89	3.07	3.41	0.25	0.95	0.20	–	–	–	S4
miniSMDC020F	4.37	4.73	0.635	0.89	3.07	3.41	0.25	0.95	0.20	–	–	–	S4
miniSMDC050F	4.37	4.73	0.38	0.62	3.07	3.41	0.25	0.95	0.20	–	–	–	S4
miniSMDC075F	4.37	4.73	0.38	0.62	3.07	3.41	0.25	0.95	0.20	–	–	–	S4
miniSMDC075F/24	4.37	4.83	0.81	1.30	3.07	3.41	0.25	0.95	0.20	–	–	–	S4
miniSMDC110F	4.37	4.73	0.38	0.62	3.07	3.41	0.25	0.95	0.20	–	–	–	S4
miniSMDC110F/16	4.37	4.73	0.28	0.48	3.07	3.41	0.25	0.95	0.20	–	–	–	S4
miniSMDC110F/24	4.37	4.83	0.81	1.30	3.07	3.41	0.25	0.95	0.20	–	–	–	S4
miniSMDC125F	4.37	4.73	0.28	0.48	3.07	3.41	0.25	0.95	0.20	–	–	–	S4
miniSMDC125F/16	4.37	4.83	0.28	0.48	3.07	3.41	0.25	0.95	0.20	–	–	–	S4
miniSMDC150F	4.37	4.73	0.28	0.48	3.07	3.41	0.25	0.95	0.20	–	–	–	S4
miniSMDC150F/12	4.37	4.73	0.28	0.48	3.07	3.41	0.25	0.95	0.20	–	–	–	S4
miniSMDC150F/24	4.37	4.83	1.00	1.68	3.07	3.41	0.25	0.95	0.20	–	–	–	S4
miniSMDC160F	4.37	4.73	0.28	0.48	3.07	3.41	0.25	0.95	0.20	–	–	–	S4
miniSMDC200F	4.37	4.73	0.51	1.22	3.07	3.41	0.25	0.95	0.20	–	–	–	S4
miniSMDC260F	4.37	4.73	0.48	0.74	3.07	3.41	0.25	0.95	0.20	–	–	–	S4
miniSMDC260F/12	4.37	4.73	0.76	1.25	3.07	3.41	0.25	0.95	0.20	–	–	–	S4
miniSMDC260F/16	4.37	4.73	0.76	1.25	3.07	3.41	0.25	0.95	0.20	–	–	–	S4

Surface-Mount Devices – miniSMDE

Features

- Broadest range of resettable devices available in the industry
- Current Rating: 1.9 A
- Voltage Rating: 16 V
- Agency Recognition: UL, CSA, TÜV
- Small footprint
- Fast time-to-trip
- Low resistance

Terminal Pad Material:

100 % matte tin with nickel underplate

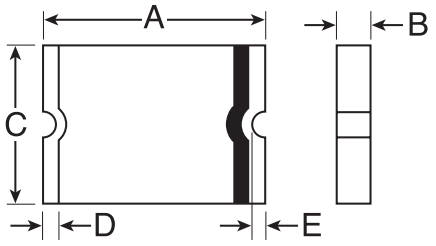

Figure S5

Part Number	Dimensions (mm)												Figure
	A		B		C		D		E		F		
	Min.	Max.	Min.	Max.	Min.	Max.	Min.	Max.	Min.	Max.	Min.	Max.	
miniSMDE Series Size 11550 mm/4420 mils													
miniSMDE190F	11.15	11.51	0.33	0.53	4.83	5.33	0.51	1.02	0.38	–	–	–	S5

All specifications subject to change. Consult Tyco Electronics for latest specifications.

Fast Acting Fuses

Features

Fast-acting fuses help provide overcurrent protection on systems using DC power sources up to 63 V DC. The fuse's monolithic, multilayer design provides the highest hold current in the smallest footprint, reduces diffusion-related aging, improves product reliability and resilience, and enhances high temperature performance in a wide range of circuit protection designs. This helps facilitate the development of more reliable, high-performance consumer electronics such as laptops, multimedia devices, cell phones, and other portable electronics.

Material Specifications

Construction Body Material: Ceramic
Termination Material: Silver, Nickel, Tin
Fuse Element: Silver
Terminal Strength: Hanging Test
0603: 0.5 kg, 30 seconds;
1206: 1.5 kg, 30 seconds;
0402: Part types meet 2-pound push test

Dimensions and Pad Layout

0402 (1005 mm) Fast Acting Surface-Mount Chip Fuses

Shape and Dimensions
Inch (mm)

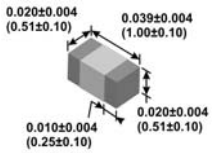

Recommended Pad Layout
Inch (mm)

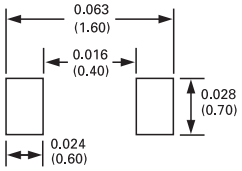

0603 (1608 mm) Fast Acting Surface-Mount Chip Fuses

Shape and Dimensions
Inch (mm)

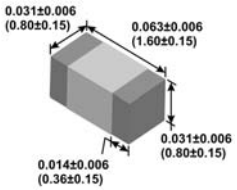

Recommended Pad Layout
Inch (mm)

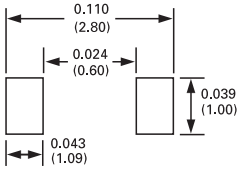

1206 (3216 mm) Fast Acting Surface-Mount Chip Fuses

Shape and Dimensions
Inch (mm)

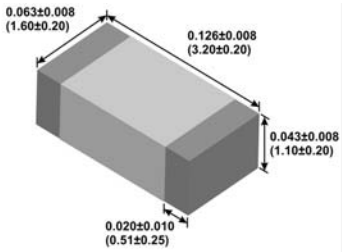

Recommended Pad Layout
Inch (mm)

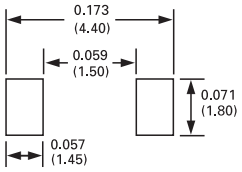

Part Number	Typical Electrical Characteristics*		Maximum Interrupt Ratings*	
	Rated Current (A)	Nominal Cold DCR† (Ω)	Voltage (V_{DC})	Current (A)
0402SFF050F/24	0.50	0.380	24	35
0402SFF075F/24	0.75	0.210		
0402SFF100F/24	1.00	0.120		
0402SFF150F/24	1.50	0.056		
0402SFF200F/24	2.00	0.035		
0402SFF300F/24	3.00	0.021		
0402SFF400F/24	4.00	0.014		
0603SFF050F/32	0.50	0.485	32	50
0603SFF075F/32	0.75	0.254		
0603SFF100F/32	1.00	0.131		
0603SFF150F/32	1.50	0.059		35
0603SFF200F/32	2.00	0.044		
0603SFF250F/32	2.50	0.032		
0603SFF300F/32	3.00	0.025		
0603SFF350F/32	3.50	0.024		
0603SFF400F/32	4.00	0.018		
0603SFF500F/32	5.00	0.013		
0603SFF600F/24	6.00	0.010	24	
1206SFF050F/63	0.50	0.500	63	50
1206SFF075F/63	0.75	0.330		
1206SFF100F/63	1.00	0.220		
1206SFF150F/63	1.50	0.120		
1206SFF175F/63	1.75	0.100		
1206SFF200F/63	2.00	0.050		
1206SFF250F/32	2.50	0.035	32	
1206SFF300F/32	3.00	0.031		
1206SFF400F/32	4.00	0.022		
1206SFF500F/32	5.00	0.015		
1206SFF600F/24	6.00	0.013	24	45
1206SFF700F/24	7.00	0.011		
1206SFF800F/24	8.00	0.008		

*) Measured at 25 °C
†) Measured at 10% of rated current

Slow Blow Fuses

Features

Industry standard 1206 chip sizes, high reliability and strong arc suppression characteristics. The fuse's monolithic, multi-layer design helps provide some of the highest current ratings available in the 1206 footprint and enhances high temperature performance in a wide range of circuit protection designs. Designed for DC power applications of up to 63 V DC such as protection of power supplies, capacitor filter banks, LCD backlight inverters, electric motors and portable electronics.

Material Specifications

Construction Body Material:
Ceramic

Termination Material:
Silver, Nickel, Tin

Fuse Element: Silver

Terminal Strength:
Hanging Test: 1.5 kg, 30 seconds

Dimensions and Pad Layout

1206 (3216mm) Slow Blow Surface-Mount Chip Fuses

Shape and Dimensions
Inch (mm)

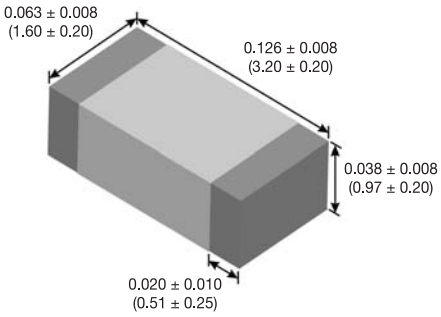

Recommended Pad Layout
Inch (mm)

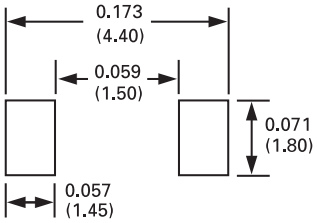

Part Number	Typical Electrical Characteristics*			
	Rated Current (A)	Nominal Cold DCR† (Ω)	Nominal I^2t $(A^2sec)^2$	Voltage (V_{DC})
1206SFS100F/63	1.0	0.260	0.11	63
1206SFS125F/63	1.25	0.150	0.22	
1206SFS150F/63	1.5	0.130	0.23	
1206SFS200F/63	2.0	0.090	0.63	
1206SFS250F/32	2.5	0.050	0.90	32
1206SFS300F/32	3.0	0.032	1.20	
1206SFS350F/32	3.5	0.028	1.60	
1206SFS400F/32	4.0	0.022	2.20	
1206SFS450F/32	4.5	0.019	3.60	
1206SFS500F/32	5.0	0.018	5.30	
1206SFS550F/24	5.5	0.014	6.40	24
1206SFS600F/24	6.0	0.012	8.50	
1206SFS700F/24	7.0	0.009	10.00	
1206SFS800F/24	8.0	0.008	16.90	

*) Measured at 10 % of rated current and 25 °C
†) Melting I^2t at 0.001 sec clear time

All specifications subject to change. Consult Tyco Electronics for latest specifications.

ESD Protection Devices

Features

Designed for I/O port protection in high-speed data transmission applications, PESD protection devices shunt ESD away from sensitive circuitry in electronic devices.

The Raychem PESD protection devices provide exceptionally low capacitance, and they perform better than other comparable components in transmission line pulse (TLP) testing, as well as IEC61000-4-2 testing, especially after multiple hits (up to 1000). The devices offer a lower trigger voltage and a lower clamping voltage than typical polymer ESD devices, resulting in improved protection of sensitive electronic components.

Dimensions

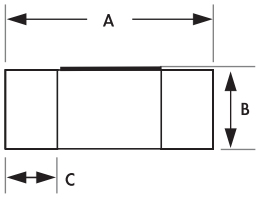

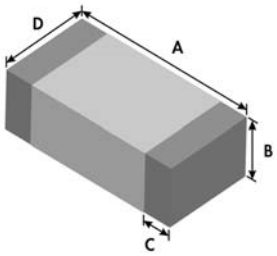

Part Number	Dimensions (mm)*							
	Length A		Height B		Terminal Width C		Width D	
	Min.	Max.	Min.	Max.	Min.	Max.	Min.	Max.
0402	0.95	1.05	0.33	0.43	0.10	0.30	0.45	0.55
0603	1.40	1.80	0.38	0.58	0.10	0.50	0.60	1.00

*) Rounded off approximation

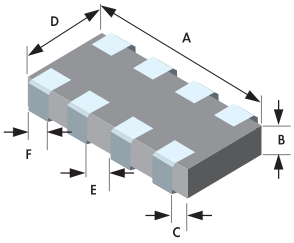

Part Number	Dimensions (mm)*											
	Length A		Height B		Terminal Width C		Width D		Width E		Width F	
	Min.	Max.	Min.	Max.	Min.	Max.	Min.	Max.	Min.	Max.	Min.	Max.
1206Q	3.0	3.4	0.4	0.6	0.1	0.3	1.4	1.8	0.2	0.6	0.2	0.6

*) Rounded off approximation

Pad Layout

Part Number	Dimensions (mm)*					
	V Ref.	W Ref.	X Ref.	Y Ref.		Figure
PESD0402	–	0.65 ±0.05	0.35 ±0.05	0.85 ±0.05	–	E3
PESD0603	–	0.95 ±0.05	0.55 ±0.05	1.05 ±0.05	–	E3
PESD1206Q	3.2 ±0.2	22.0 ±0.2	0.50 ±0.10	0.80 ±0.20	1.0 ±0.1	E4

Note: Solder Thickness 0.15 to 0.20 mm

*) Rounded off approximation

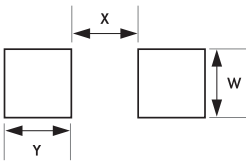

Figure E3

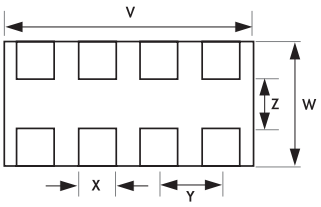

Figure E4

Engineering Notes

All specifications subject to change. Consult Tyco Electronics for latest specifications.

FSM 6 x 6 Series

■ Different Actuator and Mounting Versions

Technical Features

Style:
6 x 6 mm

Mounting Style:
THT, SMT

Right-Angle Versions:
Available

Low Profile Versions:
Available

Flush Actuator Version:
Available

Different Actuator Styles:
Available

ESD Ground Terminal/ Locating Post:
Optional/No

Sealed Versions:
Available

Standard Actuation Force:
1.6 and 2.6 N

Electrical Endurance:
up to 2,000,000 cycles

Operating Temperature Range:
–20 °C up to +85 °C

Dimensions (L x W x H)
Horizontal Version:
6.0 x 6.0 x 4.3 … 17.0 mm

Sealed Version:
7.6 x 7.6 x 3.3 … 5.0 mm

Packaging:
Tape and Reel, Bulk

Product Key	Actuator Force (N)	Height (mm)	Mounting	Packaging	Part Number
FSM2JSMATR	1.6	4.3	SMT	Tape and Reel	3-1437565-0
FSM4JSMATR	1.6	5.0			4-1437565-2
FSM6JSMATR	1.6	7.0			5-1437565-0
FSM2JSMAATR	2.6	4.3			2-1437565-9
FSM4JSMXLTR	0.7	5.0			1571563-2
FSM4JSMAATR	2.6	5.0			1571563-4
FSM6JSMAATR	2.6	7.0			1-1571563-2
FSM2JSMLTR	1.0	4.3			1571527-2
FSM2JSMA	1.6	4.3		Bulk	2-1437565-7
FSM4JSMA	1.6	5.0			4-1437565-1
FSM6JSMA	1.6	7.0			4-1437565-9
FSM2JSMAA	2.6	4.3			2-1437565-8
FSM4JSMXL	0.7	5.0			1571563-1
FSM4JSMAA	2.6	5.0			1571563-3
FSM6JSMAA	2.6	7.0			1-1571563-1
FSM2JSML	1.0	4.3			1571527-1
FSM, Extended Life, J-Lead					
FSM, J	1.6	2.5	SMT/J	Bulk	1571625-5
				Tape and Reel	1571625-6
FSM, Extended Life, Gull Wing					
FSM, G	1.6	2.5	SMT/G	Bulk	1571626-5
				Tape and Reel	1571626-6
FSM, Extended Life, Gull Wing, Ground Terminal					
FSM, G, Grd.T.	1.6	2.5	SMT/G	Bulk	1571636-5
				Tape and Reel	1571636-6
FSM1LP, Low Profile					
FSM1LP	1.6	3.1	SMT	Bulk	1-1437565-6
FSM1LPA	2.6				1-1437565-7
FSM1LPTR	1.6	3.1	SMT	Tape and Reel	1-1437565-9
FSM1LPATR	2.6				1-1437565-8
FSM Sealed Extended Actuator					
FSM Sealed	1.6	4.3	SMT	Bulk	1571294-1
				Tape and Reel	1571294-2
		5.0	SMT	Bulk	1571294-3
				Tape and Reel	1571294-4
FSM Sealed Flush Actuator					
FSM Sealed, Fl.	1.6	3.3	SMT	Bulk	1571296-1
				Tape and Reel	1571296-2
FSM Sealed Right-Angle					
FSM Sealed RA	2.6	–	SMT	Bulk	1571407-1
				Tape and Reel	1571407-2

FSMCT Series

■ Low Profile

Technical Features

Style:
5 x 5 mm

Mounting Style:
SMT

Right-Angle Versions:
No

Low Profile Versions:
No

Flush Actuator Version:
No

Different Actuator Styles:
No

ESD Ground Terminal/ Locating Post:
No/No

Sealed Versions:
No

Standard Actuation Force:
1.6 and 2.6 N

Electrical Endurance:
up to 1,000,000 cycles

Operating Temperature Range:
–20 °C up to +85 °C

Dimensions (L x W x H) Horizontal Version:
5.2 x 5.2 x 1.5 mm

Packaging:
Tape and Reel

Product Key	Actuator Force (N)	Height (mm)	Mounting	Packaging	Part Number
FSMCTTR	1.6	1.5	SMT	Tape and Reel	8-1437565-0
FSMCTATR	2.6				8-1437565-1

All specifications subject to change. Consult Tyco Electronics for latest specifications.

FSM 3.5 x 6 Series

■ Small PCB Footprint

Technical Features

Style:
3.5 x 6 mm

Mounting Style:
THT, SMT

Right-Angle Versions:
No

Low Profile Versions:
No

Flush Actuator Version:
Available

Different Actuator Styles:
Available

ESD Ground Terminal/ Locating Post:
No/No

Sealed Versions:
Available

Standard Actuation Force:
1.3 and 1.8 N

Electrical Endurance:
up to 40,000 cycles

Operating Temperature Range:
–40 °C up to +85 °C

Dimensions (L x W x H)
Horizontal Version:
3.5 x 6.0 x 4.3 … 5.0 mm

Sealed Version:
4.7 x 6.8 x 4.3 … 5.0 mm

Packaging:
Tape and Reel, Bulk

Product Key	Actuator Force (N)	Height (mm)	Mounting	Packaging	Part Number
FSMSM	1.8	4.3	SMT	Bulk	1437566-3
FSMSMTR				Tape and Reel	1437566-4
FSMJM3,5ATR		3.5	SMT/J		147873-3
FSMJM4,3ATR		4.3			147873-2
FSMJM5ATR		5.0			147873-1

FSM Sealed

FSM Sealed	1.3	5.0	SMT	Tape and Reel	1571298-2
FSM Sealed		4.3	SMT/J		1571299-2
FSM Sealed		5.0	SMT/J		1571299-4

FSM 0.5 mm

■ **Ultra Low Profile**

Technical Features

Style:
5 x 5 mm

Mounting Style:
SMT

Right-Angle Versions:
No

Low Profile Versions:
Standard

Flush Actuator Version:
Standard

Different Actuator Styles:
No

ESD Ground Terminal/ Locating Post:
No/No

Sealed Versions:
No

Standard Actuation Force:
1.6 N

Electrical Endurance:
up to 500,000 cycles

Operating Temperature Range:
–20 °C up to +70 °C

Dimensions (L x W x H) Horizontal Version:
4.8 x 4.8 x 0.5 mm

Packaging:
Tape and Reel

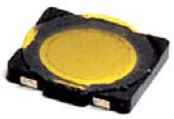

Product Key	Actuator Force (N)	Height (mm)	Mounting	Packaging	Part Number
FSM 4.8x4.8x0.5	1.6	0.5	SMT	Tape and Reel	1825534-1

All specifications subject to change. Consult Tyco Electronics for latest specifications.

Turtle Style

■ Side Actuated Tactile

Technical Features

Style:
Turtle

Mounting Style:
SMT

Right-Angle Versions:
No

Low Profile Versions:
No

Flush Actuator Version:
No

Different Actuator Styles:
No

ESD Ground Terminal/ Locating Post:
No/Optional

Sealed Versions:
No

Standard Actuation Force:
1.6 N

Electrical Endurance:
up to 100,000 cycles

Operating Temperature Range:
–20 °C up to +85 °C

Dimensions (L x W x H) Horizontal Version:
4.5 x 7.5 x 1.8 mm

Packaging:
Tape and Reel, Bulk

Product Key	Actuator Force (N)	Height (mm)	Mounting	Packaging	Part Number
FSM Turtle	1.6	1.8	SMT	Bulk	1571262-1
FSM Turtle				Tape and Reel	1571262-2

CoinKey™

- **Improve the Human Interface**

Technical Features

CoinKey is a one finger operated key with excellent input and navigational capabilities.

With its two-ways rotation and 5 press points; left, right, top, bottom and center, CoinKey is the ultimate key for multi-application handheld devices.

Its unique functionality makes it possible to develop more efficient and user-friendly menu systems than with any other navigation key in the market. We would be happy to offer opportunity assessment in that regard.

Documentation

Drawing:
1705448-1

Product Specification:
108-19288

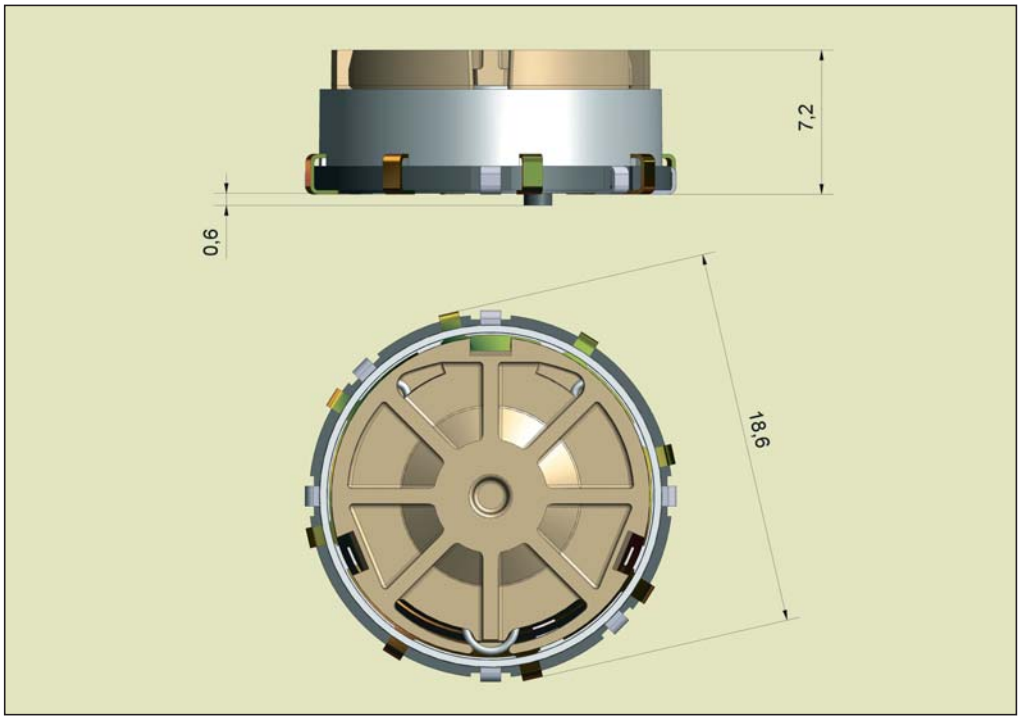

CoinKey is a registered trademark of Telenostra

All specifications subject to change. Consult Tyco Electronics for latest specifications.

Engineering Notes

MP Metalized Polyester Labels

Tyco Electronics MP is a thermal transfer printable metalized polyester film with a permanent acrylic adhesive, designed for rating plates and other applications that require a metal look, such as nameplates, equipment labels, detailed product information labels and serial number plates.

MP is UL Listed and CSA Certified.
Print performance and durability are reliable when used with Tyco Electronics's RHD series ribbon.

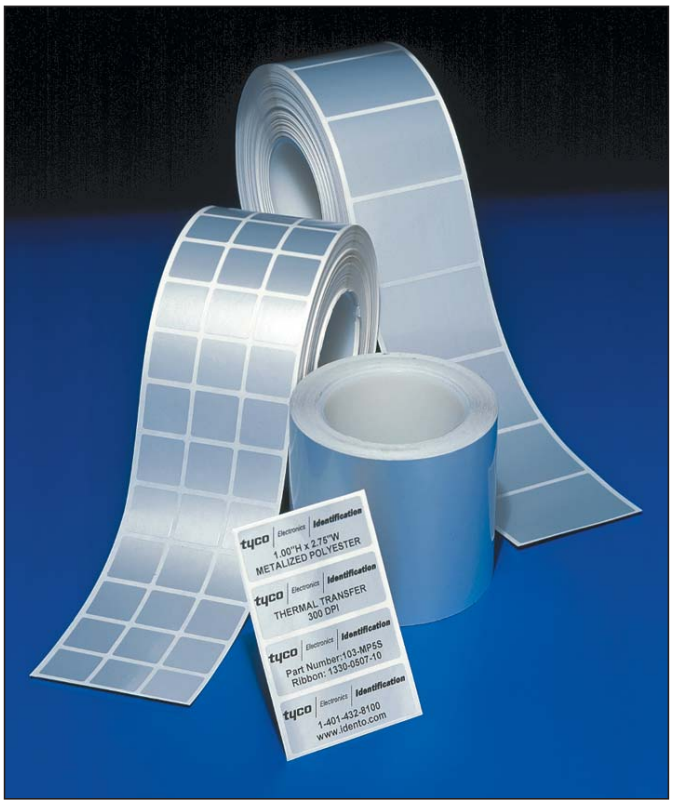

Features and Benefits

- Thermal transfer printable
- Metalized appearance
- Ideal for rating plate applications
- Several die-cut sizes available
- UL Listed and CSA Certified

Specifications: TTDS-074
Adhesive: Permanent Acrylic
Service Temperature: –40 °C to +150 °C
Recommended Printer: T308S*
Recommended Ribbon: 1330-0607-10*

*) Alternative printers and ribbons are available for special applications. Contact Tyco Electronics for more information.

Part Numbering System

MP-080080-10-8A

- Color
- Pack Size
- Label Height (mm)
- Label Width (mm)
- Product Family

Ordering Information

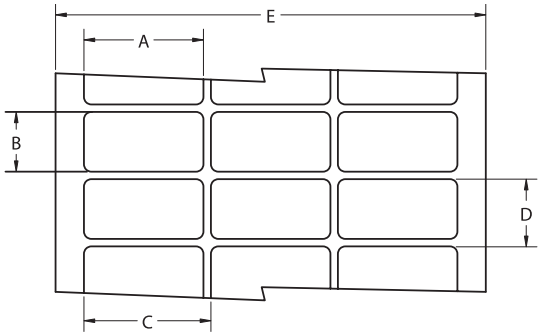

All specifications subject to change. Consult Tyco Electronics for latest specifications.

MP Metalized Polyester Labels (continued)

Product Order Code	Package Quantity	Labels Across	Dimensions (mm)				
			Label Width A	Label Height B	Horizontal Repeat C	Vertical Repeat D	Web Width E
MP-040040-25-8A	25,000	20	4.0	4.0	4.0	7.2	86.0
MP-064064-25-8A	25,000	12	6.4	6.4	6.4	9.5	82.2
* MP-080080-10-8A	10,000	8	8.0	8.0	9.9	13.3	83.3
MP-089047-10-8A	10,000	5	8.9	4.7	11.4	7.9	60.6
MP-095080-25-8A	25,000	5	9.5	8.0	12.2	12.7	64.3
MP-095095-10-8A	10,000	7	9.5	9.5	11.1	12.7	82.1
MP-127111-10-8A	10,000	5	12.7	11.1	16.8	14.3	86.0
MP-127127-10-8A	10,000	5	12.7	12.7	15.9	15.9	82.6
* MP-165051-25-8A	25,000	4	16.5	5.1	17.8	8.3	75.8
MP-165102-10-8A	10,000	5	16.5	10.2	19.1	13.8	99.1
MP-171171-10-8A	10,000	5	17.1	17.1	19.7	20.3	101.8
* MP-178095-10-8A	10,000	4	17.8	9.5	19.1	12.7	80.9
* MP-191064-10-8A	10,000	4	19.1	6.4	21.6	9.5	89.9
MP-191114-15-8A	15,000	3	19.1	11.4	22.2	14.7	69.5
* MP-203127-10-8A	10,000	4	20.3	12.7	22.9	15.9	94.6
MP-229064-10-8A	10,000	3	22.9	6.4	28.6	9.5	86.0
MP-254045-10-8A	10,000	3	25.4	4.6	31.8	8.5	95.3
MP-254064-10-8A	10,000	3	25.4	6.4	27.9	9.5	87.3
MP-254097-10-8A	10,000	3	25.4	9.7	27.9	12.7	87.4
MP-254127-10-8A	10,000	3	25.4	12.7	27.9	16.9	87.4
MP-254254-10-8A	10,000	3	25.4	25.4	27.9	28.6	87.4
* MP-305047-10-8A	10,000	2	30.5	4.7	33.0	7.8	69.5
MP-318064-10-8A	10,000	1	31.8	6.4	N/A	9.5	37.9
MP-318097-10-8A	10,000	1	31.8	9.7	N/A	12.7	37.8
MP-381064-10-8A	10,000	1	38.1	6.4	N/A	9.5	44.5
* MP-381127-5-8A	5,000	2	38.1	12.7	44.2	15.9	88.2
MP-381191-5-8A	5,000	2	38.1	19.1	43.2	22.2	87.6
* MP-381381-2.5-8A	2,500	2	38.1	38.1	44.5	40.8	88.9
* MP-381635-5-8A	5,000	2	38.1	63.5	40.6	66.7	84.7
* MP-406254-1.5-8A	1,500	2	40.6	25.4	55.9	38.1	102.9
MP-445064-10-8A	10,000	1	44.5	6.4	N/A	9.5	50.4
MP-445102-5-8A	5,000	1	44.5	10.2	N/A	12.7	50.4
MP-445445-2-8A	2,000	1	44.5	44.5	N/A	47.6	50.4
MP-478175-5-8A	5,000	1	47.8	17.5	N/A	24.4	66.0
MP-508064-10-8A	10,000	1	50.8	6.4	N/A	9.5	56.9
MP-508095-5-8A	5,000	1	50.8	9.5	N/A	12.7	57.2
MP-508127-5-8A	5,000	1	50.8	12.7	N/A	15.9	56.9
MP-508254-5-8A	5,000	1	50.8	25.4	N/A	28.6	57.2
MP-508318-2.5-8A	2,500	1	50.8	31.8	N/A	34.9	56.9
MP-508508-3-8A	3,000	1	50.8	50.8	N/A	54.6	54.0
MP-523841-1.5-8A	1,500	1	52.3	84.1	N/A	88.9	58.2
MP-610419-2.5-8A	2,500	1	61.0	41.9	N/A	45.5	67.3
MP-699191-5-8A	5,000	1	69.9	19.1	N/A	23.3	76.2
MP-699254-5-8A	5,000	1	69.9	25.4	N/A	28.6	76.2
MP-762381-2.5-8A	2,500	1	76.2	38.1	N/A	41.3	82.3
MP-762508-2.5-8A	2,500	1	76.2	50.8	N/A	54.0	82.6
MP-762127-1-8A	1,000	1	76.2	127.0	N/A	129.5	79.4
MP-101508-2.5-8A	2,500	1	101.6	50.8	N/A	54.6	104.1
MP-101635-2.5-8A	2,500	1	101.6	63.5	N/A	66.7	107.7
MP-101762-1.8-8A	1,800	1	101.6	76.2	N/A	79.4	104.1
MP-101101-1.3-8A	1,300	1	101.6	101.6	N/A	104.8	104.1
MP-101165-0.85-8A	850	1	101.6	165.1	N/A	168.3	104.9

*) **Note:** Standard Format Not Compatible with T200 Printers.

Kapton® Labels

Tyco Electronics polyimide (Kapton®) labels are all ideal for high temperature labeling requirements such as printed circuit boards. They are suitable for direct wave (bottom side) and IR reflow (top side) PCB applications. Tyco Electronics Kapton® labels are designed to withstand the fluxes, cleaning solvents and molten solder encountered in the manufacture of printed circuit boards. They offer excellent contrast for bar code applications.

Tyco Electronics Kapton® labels are suitable for the harshest high temperature applications. For reliable print performance and durability, use with Tyco Electronics's RHT-45 series ribbon.

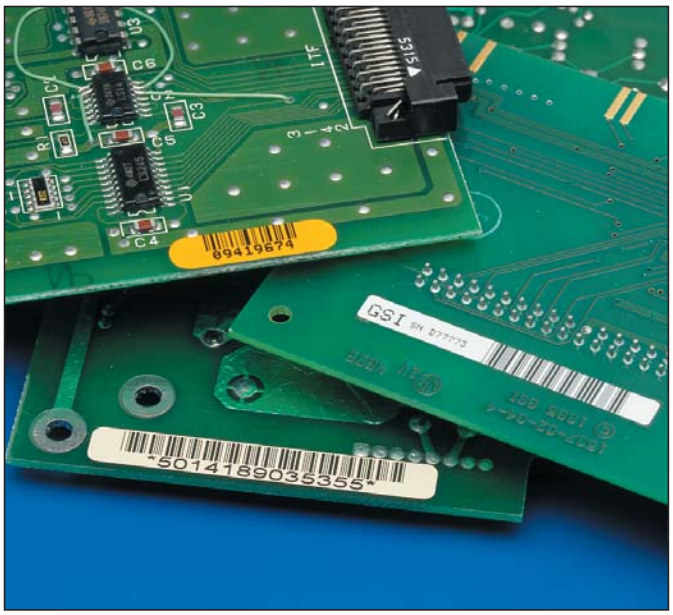

Features and Benefits

- UL Listed: T1K, T2K & TSK
- Thermal transfer printable
- High temperature permanent acrylic adhesive

T1K

- Gloss white topcoat
- Withstands surface mount board processes on either the top or bottom side of the board.
- Low profile 1 mil film offers polyimide thermal performance at competitive cost.
- Ideal for manual apply applications.

T2K

- Gloss white topcoat
- Withstands surface mount board processes on either the top or bottom side of the board.
- Ideal for auto apply applications.

KTT

- Matte tan topcoat
- Withstands surface mount board processes on either the top or bottom side of the board.
- Product approved for aerospace/defense applications.
- Low outgassing

TSK

- High opacity gloss white topcoat.
- Withstands surface mount board processes on either the top or bottom side of the board.
- Deemed to be a static safe product in accordance with EIA 625, EIA 541. Test methods employed were in accordance with EOS/ESD S11.11.
- Ideal for auto apply applications.

T2Y

- High opacity gloss white topcoat.
- Economic alternative to T1K material.
- Withstands surface mount board processes on either the top or bottom side of the board – can also be used on the top side of the board in mixed processes, but it is not recommended for the bottom side which is directly exposed to the wave solder environment.

Specifications:	T1K	TTDS-034
	T2K	TTDS-035
	TSK	TTDS-085
Adhesive:	Permanent Acrylic	
Service Temperature:		
T1K[1], T2K[2], TSK[2], KTT[2]	–40 °C to +260 °C	
T2Y[3]	–40 °C to +232 °C	
	1 Flash exposure to +472 °C 2 Flash exposure to +538 °C 3 Flash exposure to +316 °C	
Recommended Printer:		
T1K, T2K, TSK, T2Y, T2Y, KTT	T312S*	
Recommended Ribbon:	1330-0619-10*	

*) Alternative printers and ribbons are available for special applications. Contact Tyco Electronics for more information.

Part Numbering System

T1K-044033-10-9

- Color
- Pack Size
- Label Height (mm)
- Label Width (mm)
- Product Family

All specifications subject to change. Consult Tyco Electronics for latest specifications.

Kapton® Labels (continued)

Ordering Information

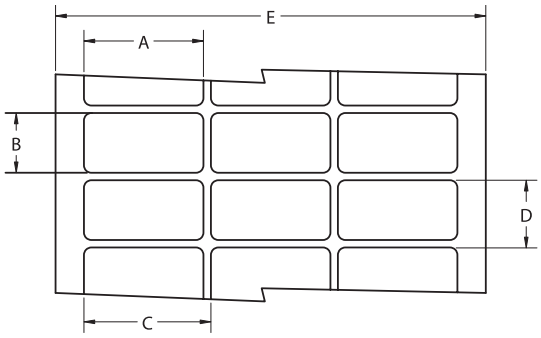

Product Order Code	Package Quantity	Labels Across	Dimensions (mm)				
			Label Width A	Label Height B	Horizontal Repeat C	Vertical Repeat D	Web Width E
T1K-044033-10-9	10,000	20	4.4	3.3	4.4	9.5	92.4
T1K-064064-25-9	25,000	12	6.4	6.4	6.4	9.5	82.2
T1K-080080-10-9	10,000	8	8.0	8.0	9.9	13.3	83.3
T1K-095080-25-9	25,000	5	9.5	8.0	12.2	12.7	64.3
T1K-095095-10-9	10,000	7	9.5	9.5	11.1	12.7	82.1
T1K-127032-10-9	10,000	5	12.7	3.2	19.1	3.2	94.9
T1K-127111-10-9	10,000	5	12.7	11.1	16.8	14.3	86.0
T1K-127127-10-9	10,000	5	12.7	12.7	15.9	15.9	82.6
T1K-165051-25-9	25,000	4	16.5	5.1	17.8	8.3	75.8
T1K-171171-10-9	10,000	5	17.1	17.1	19.7	20.3	101.8
T1K-178095-10-9	10,000	4	17.8	9.5	19.1	12.7	80.9
T1K-191064-10-9	10,000	4	19.1	6.4	21.6	9.5	89.9
T1K-229064-10-9	10,000	3	22.9	6.4	28.6	9.5	86.0
T1K-254045-10-9	10,000	3	25.4	4.6	31.8	8.5	95.3
T1K-254064-10-9	10,000	3	25.4	6.4	27.9	9.5	87.3
T1K-254097-10-9	10,000	3	25.4	9.7	27.9	12.7	87.4
T1K-254127-10-9	10,000	3	25.4	12.7	27.9	16.9	87.4
T1K-254254-10-9	10,000	3	25.4	25.4	27.9	28.6	87.4
T1K-305047-10-9	10,000	2	30.5	4.7	33.0	7.8	69.5
T1K-318064-10-9	10,000	1	31.8	6.4	N/A	9.5	37.9
T1K-381020-10-9	10,000	1	38.1	2.0	N/A	10.7	44.1
T1K-381127-5-9	5,000	2	38.1	12.7	44.2	15.9	88.2
T1K-381381-2.5-9	2,500	2	38.1	38.1	44.5	40.8	88.9
T1K-445064-10-9	10,000	1	44.5	6.4	N/A	9.5	50.4
T1K-445102-5-9	5,000	1	44.5	10.2	N/A	12.7	50.4
T1K-508064-10-9	10,000	1	50.8	6.4	N/A	9.5	56.9
T1K-508095-5-9	5,000	1	50.8	9.5	N/A	12.7	57.2
T1K-508127-5-9	5,000	1	50.8	12.7	N/A	15.9	56.9

*) **Note:** Kapton®/Polyimide Labels Not Compatible with T200 Printers.

WP White Polyester Labels

Tyco Electronics WP is a thermal transfer printable white polyester film with a permanent acrylic adhesive. It is ideal for bar coding, PCB and component labeling, as well as general purpose labeling applications that require a high durability white label. WP is resistant to a variety of solvents while maintaining print quality.

It is UL Listed and CSA Certified, and print performance and durability are reliable when used with Tyco Electronics's RHD series ribbon.

Features and Benefits

- Thermal transfer printable
- Excellent for use in PCB component labeling
- Ink receptive topcoat
- Excellent for bar code applications
- UL Listed and CSA Certified

Specifications: TTDS-073
Adhesive: Permanent Acrylic
Service Temperature: –40 °C to +150 °C
Recommended Printer: T308S*
Recommended Ribbon: 1330-0607-10*

*) Alternative printers and ribbons are available for special applications. Contact Tyco Electronics for more information.

Part Numbering System

WP-040040-10-9

- Color
- Pack Size
- Label Height (mm)
- Label Width (mm)
- Product Family

Ordering Information

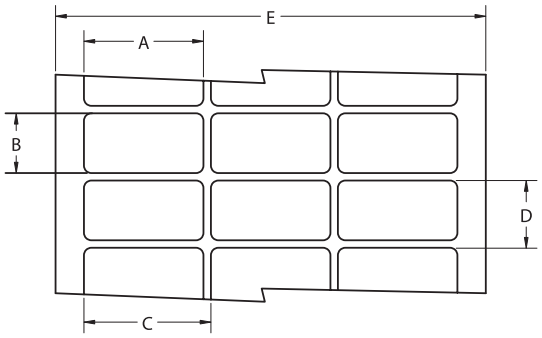

All specifications subject to change. Consult Tyco Electronics for latest specifications.

WP White Polyester Labels (continued)

Product Order Code	Package Quantity	Labels Across	Dimensions (mm)				
			Label Width A	Label Height B	Horizontal Repeat C	Vertical Repeat D	Web Width E
WP-040040-25-9	25,000	20	4.0	4.0	4.0	7.2	86.0
WP-064064-25-9	25,000	12	6.4	6.4	6.4	9.5	82.2
* WP-080080-10-9	10,000	8	8.0	8.0	9.9	13.3	83.3
WP-089047-10-9	10,000	5	8.9	4.7	11.4	7.9	60.6
WP-095080-25-9	25,000	5	9.5	8.0	12.2	12.7	64.3
WP-095095-10-9	10,000	7	9.5	9.5	11.1	12.7	82.1
WP-127111-10-9	10,000	5	12.7	11.1	16.8	14.3	86.0
WP-127127-10-9	10,000	5	12.7	12.7	15.9	15.9	82.6
* WP-165051-25-9	25,000	4	16.5	5.1	17.8	8.3	75.8
WP-165102-10-9	10,000	5	16.5	10.2	19.1	13.8	99.1
WP-171171-10-9	10,000	5	17.1	17.1	19.7	20.3	101.8
* WP-178095-10-9	10,000	4	17.8	9.5	19.1	12.7	80.9
* WP-191064-10-9	10,000	4	19.1	6.4	21.6	9.5	89.9
WP-191114-15-9	15,000	3	19.1	11.4	22.2	14.7	69.5
* WP-203127-10-9	10,000	4	20.3	12.7	22.9	15.9	94.6
WP-229064-10-9	10,000	3	22.9	6.4	28.6	9.5	86.0
WP-254045-10-9	10,000	3	25.4	4.6	31.8	8.5	95.3
WP-254064-10-9	10,000	3	25.4	6.4	27.9	9.5	87.3
WP-254097-10-9	10,000	3	25.4	9.7	27.9	12.7	87.4
WP-254127-10-9	10,000	3	25.4	12.7	27.9	16.9	87.4
WP-254254-10-9	10,000	3	25.4	25.4	27.9	28.6	87.4
* WP-305047-10-9	10,000	2	30.5	4.7	33.0	7.8	69.5
WP-318064-10-9	10,000	1	31.8	6.4	N/A	9.5	37.9
WP-318097-10-9	10,000	1	31.8	9.7	N/A	12.7	37.8
WP-381064-10-9	10,000	1	38.1	6.4	N/A	9.5	44.5
* WP-381127-5-9	5,000	2	38.1	12.7	44.2	15.9	88.2
WP-381191-5-9	5,000	2	38.1	19.1	43.2	22.2	87.6
* WP-381381-2.5-9	2,500	2	38.1	38.1	44.5	40.8	88.9
* WP-381635-5-9	5,000	2	38.1	63.5	40.6	66.7	84.7
* WP-406254-1.5-9	1,500	2	40.6	25.4	55.9	38.1	102.9
WP-445064-10-9	10,000	1	44.5	6.4	N/A	9.5	50.4
WP-445102-5-9	5,000	1	44.5	10.2	N/A	12.7	50.4
WP-445445-2-9	2,000	1	44.5	44.5	N/A	47.6	50.4
WP-478175-5-9	5,000	1	47.8	17.5	N/A	24.4	66.0
WP-508064-10-9	10,000	1	50.8	6.4	N/A	9.5	56.9
WP-508095-5-9	5,000	1	50.8	9.5	N/A	12.7	57.2
WP-508127-5-9	5,000	1	50.8	12.7	N/A	15.9	56.9
WP-508254-5-9	5,000	1	50.8	25.4	N/A	28.6	57.2
WP-508318-2.5-9	2,500	1	50.8	31.8	N/A	34.9	56.9
WP-508508-3-9	3,000	1	50.8	50.8	N/A	54.6	54.0
WP-523841-1.5-9	1,500	1	52.3	84.1	N/A	88.9	58.2
WP-610419-2.5-9	2,500	1	61.0	41.9	N/A	45.5	67.3
WP-699191-5-9	5,000	1	69.9	19.1	N/A	23.3	76.2
WP-699254-5-9	5,000	1	69.9	25.4	N/A	28.6	76.2
WP-762254-5-9	5,000	1	76.2	25.4	N/A	28.6	82.3
WP-762381-2.5-9	2,500	1	76.2	38.1	N/A	41.3	82.3
WP-762508-2.5-9	2,500	1	76.2	50.8	N/A	54.0	82.6
WP-762127-1-9	1,000	1	76.2	127.0	N/A	129.5	79.4
WP-101508-2.5-9	2,500	1	101.6	50.8	N/A	54.6	104.1
WP-101635-2.5-9	2,500	1	101.6	63.5	N/A	66.7	107.7
WP-101762-1.8-9	1,800	1	101.6	76.2	N/A	79.4	104.1
WP-101101-1.3-9	1,300	1	101.6	101.6	N/A	104.8	104.1
WP-101165-0.85-9	850	1	101.6	165.1	N/A	168.3	104.9

*) **Note:** Standard Format Not Compatible with T200 Printers.

Engineering Notes

All specifications subject to change. Consult Tyco Electronics for latest specifications.

Numerical Index

Part Number	Page
147873-1	97
147873-2	97
147873-3	97
2-292292-4	10
2-292292-5	10
2-292292-6	10
2-292292-7	10
2-292292-8	10
2-292292-9	10
3-292292-0	10
3-292292-1	10
292331-1	41
292331-2	41
292331-3	41
292331-5	41
2-292373-6	10
2-292373-7	10
2-292373-8	10
2-292373-9	10
3-292373-0	10
3-292373-1	10
3-292373-2	10
292448-1	41
1-338063-9	7
2-338063-0	7
2-338063-1	7
2-338063-2	7
2-338063-3	7
2-338063-4	7
2-338063-5	7
2-338063-6	7
2-338063-7	7
2-338063-8	7
2-338063-9	7
3-338063-0	7
3-338063-1	7
3-338063-2	7
3-338063-3	7
3-338063-4	7
3-338063-5	7
3-338063-6	7
3-338063-7	7
3-338063-8	7
3-338063-9	7
4-338063-0	7
1-338123-9	8
2-338123-0	8
2-338123-1	8

Part Number	Page
2-338123-2	8
2-338123-3	8
2-338123-4	8
2-338123-5	8
2-338123-6	8
2-338123-7	8
2-338123-8	8
2-338123-9	8
3-338123-0	8
3-338123-1	8
3-338123-2	8
3-338123-3	8
3-338123-4	8
3-338123-5	8
3-338123-6	8
3-338123-7	8
3-338123-8	8
3-338123-9	8
4-338123-0	8
338610-1	25
338966-9	21
1-338967-2	21
338970-1	31
368555-1	23
368560-1	23
368565-1	23
368637-3	27
440217-1	16
440217-2	16
440297-1	25
440297-2	25
440297-3	25
440297-4	25
440343-1	16
440423-1	30
440430-1	30
440432-1	30
5-619028-2	35
619052-1	34
619061-1	33
619062-1	33
619068-1	34
619072-1	33
5-619078-2	35
619196-1	37
619201-1	36
619210-1	37
5-619211-1	37

Part Number	Page
619213-1	38
619214-1	38
619217-1	38
619229-1	54
619231-1	36
619238-2	54
900688-1	39
900712-1	39
900795-1	39
900905-1	39
900965-1	39
900971-1	39
900988-1	39
1279154-1	39
1377032-2	16, 17
1377032-3	16, 17
1-1377227-9	7
2-1377227-0	7
2-1377227-1	7
2-1377227-2	7
2-1377227-3	7
2-1377227-4	7
2-1377227-5	7
2-1377227-6	7
2-1377227-7	7
2-1377227-8	7
2-1377227-9	7
3-1377227-0	7
3-1377227-1	7
3-1377227-2	7
3-1377227-3	7
3-1377227-4	7
3-1377227-5	7
3-1377227-6	7
3-1377227-7	7
3-1377227-8	7
3-1377227-9	7
4-1377227-0	7
1377269-2	39
1437259-6	30
1-1437565-6	95
1-1437565-7	95
1-1437565-8	95
1-1437565-9	95
2-1437565-7	95
2-1437565-8	95
2-1437565-9	95
3-1437565-0	95

Part Number	Page
4-1437565-1	95
4-1437565-2	95
4-1437565-9	95
5-1437565-0	95
8-1437565-0	96
8-1437565-1	96
1437566-3	97
1437566-4	97
9-1442000-8	51
6-1442001-0	51
6-1442001-3	51
8-1442001-6	51
1-1442002-5	51
6-1442002-7	55
7-1442002-1	55
7-1442002-2	55
7-1442002-3	55
9-1442002-7	51
2-1442003-2	51
3-1442003-2	50
5-1442003-9	51
1442004-1	54
1447009-5	30
1447009-6	30
1447009-8	30
1447360-9	30
1-1447360-1	30
1470033-1	16
1470139-1	25
1470139-2	25
1470139-3	25
1470164-1	16
1470177-1	17
1470177-2	17
1470332-1	25
1470636-1	16
1470778-1	16
1470864-1	25
1470964-1	16
1-1483288-9	7
2-1483288-0	7
2-1483288-1	7
2-1483288-2	7
2-1483288-3	7
2-1483288-4	7
2-1483288-5	7
2-1483288-6	7
2-1483288-7	7

Numerical Index

Part Number	Page
2-1483288-8	7
2-1483288-9	7
3-1483288-0	7
3-1483288-1	7
3-1483288-2	7
3-1483288-3	7
3-1483288-4	7
3-1483288-5	7
3-1483288-6	7
3-1483288-7	7
3-1483288-8	7
3-1483288-9	7
4-1483288-0	7
1-1483437-9	7
2-1483437-0	7
2-1483437-1	7
2-1483437-2	7
2-1483437-3	7
2-1483437-4	7
2-1483437-5	7
2-1483437-6	7
2-1483437-7	7
2-1483437-8	7
2-1483437-9	7
3-1483437-0	7
3-1483437-1	7
3-1483437-2	7
3-1483437-3	7
3-1483437-4	7
3-1483437-5	7
3-1483437-6	7
3-1483437-7	7
3-1483437-8	7
3-1483437-9	7
4-1483437-0	7
1483596-1	17
1483596-2	17
1483748-1	30
1483940-1	39
1483960-1	39
1496476-1	18
1496476-2	18
1496476-3	18
1496476-4	18
1496476-5	18
1496476-6	18
1496476-8	18
1565158-1	30

Part Number	Page
1565322-1	30
1571262-1	99
1571262-2	99
1571294-1	95
1571294-2	95
1571294-3	95
1571294-4	95
1571296-1	95
1571296-2	95
1571299-2	97
1571299-4	97
1571407-1	95
1571407-2	95
1571527-1	95
1571527-2	95
1571563-1	95
1571563-2	95
1571563-3	95
1571563-4	95
1-1571563-1	95
1-1571563-2	95
1571598-2	97
1571625-5	95
1571625-6	95
1571626-5	95
1571626-6	95
1571636-5	95
1571636-6	95
1612493-1	39
1612534-1	46
1612537-1	46
1612633-1	22
1612634-1	22
1612681-1	39
1612898-1	43
1612901-1	43
1674162-1	25
1674319-1	25
1674432-1	22
1674783-1	39
1674787-1	22
1674977-1	39
1674977-2	39
1705030-1	39
1705058-1	16
1705130-1	39
1705254-1	39
1-1705300-5	9

Part Number	Page
1-1705300-6	9
1-1705300-7	9
1-1705300-8	9
1-1705300-9	9
2-1705300-0	9
2-1705300-1	9
2-1705300-2	9
2-1705300-3	9
2-1705300-4	9
1705336-2	32
1705448-1	99
1-1705615-3	10
1-1705615-4	10
1-1705615-5	10
1-1705615-6	10
1-1705615-7	10
1-1705615-8	10
1-1705615-9	10
2-1705615-0	10
1705795-1	39
1-1705813-2	12
1-1705813-3	12
1-1705813-4	12
1-1705813-5	12
1-1705813-6	12
1-1705813-7	12
1-1705813-8	12
1-1705813-9	12
1717017-1	39
1717029-1	39
1717169-1	22
1717257-1	39
1717273-1	42
1717294-1	39
1717312-1	22
1717400-1	39
1717406-1	42
1717413-1	42
1717431-1	25
1717562-1	42
1717838-1	42
1717989-1	39
1720028-2	30
1734035-1	19
1734035-3	19
1734035-4	19
1-1734035-1	19
1-1734035-3	19

Part Number	Page
1734205-1	18
1-1734205-1	18
3-1734205-1	18
4-1734205-1	18
1734234-1	25
1734234-2	25
1734234-3	25
1734234-4	25
1734300-1	30
1734472-1	25
1734472-2	25
1734472-3	25
1-1734472-1	25
1-1734472-2	25
1-1734472-3	25
1746116-1	39
1746136-1	30
1746142-1	42
1746223-1	22
1746237-1	15
1746237-2	15
1746237-3	15
1746237-4	15
1746237-5	15
1746237-6	15
1746237-7	15
1746237-8	15
1746237-9	15
1-1746237-0	15
1-1746237-1	15
1-1746237-2	15
1-1746237-3	15
1-1746237-4	15
1-1746237-5	15
1-1746237-6	15
1-1746237-7	15
1-1746237-8	15
1-1746237-9	15
2-1746237-0	15
2-1746237-1	15
2-1746237-2	15
2-1746237-3	15
2-1746237-4	15
1746716-1	22
1746717-1	22
1746730-1	39
1746750-1	39
1746751-1	39

All specifications subject to change. Consult Tyco Electronics for latest specifications.

Numerical Index

Part Number	Page
1746773-1	39
1746931-1	39
1747103-1	39
1747124-2	22
1747129-1	42
1747314-1	10
1-1747769-0	14
1-1747769-2	14
1-1747769-6	14
2-1747769-0	14
2-1747769-2	14
2-1747769-4	14
2-1747769-8	14
3-1747769-0	14
4-1747769-6	14
5-1747769-0	14
5-1747769-4	14
5-1747769-6	14
6-1747769-0	14
7-1747769-0	14
8-1747769-0	14
1750516-1	18
1775012-1	25
1775055-1	19
1775059-1	25
1775067-1	25
1775204-1	25
1775250-1	16
1825534-1	98
1827000-1	42
1827034-1	25
1827349-1	22
1827465-1	12
1827541-1	23
1827546-1	23
1827674-1	15
1827674-2	15
1827674-3	15
1827674-4	15
1827674-5	15
1827674-6	15
1827674-7	15
1827674-8	15
1827674-9	15
1-1827674-0	15
1-1827674-1	15
1-1827674-2	15
1-1827674-3	15

Part Number	Page
1-1827674-4	15
1-1827674-5	15
1-1827674-6	15
1-1827674-7	15
1-1827674-8	15
1-1827674-9	15
2-1827674-0	15
2-1827674-1	15
2-1827674-2	15
2-1827674-3	15
2-1827674-4	15
1827827-1	15
1827827-2	15
1827827-3	15
1827827-4	15
1827827-5	15
1827827-6	15
1827827-7	15
1827827-8	15
1827827-9	15
1-1827827-0	15
1-1827827-1	15
1-1827827-2	15
1-1827827-3	15
1-1827827-4	15
1-1827827-5	15
1-1827827-6	15
1-1827827-7	15
1-1827827-8	15
1-1827827-9	15
2-1827827-0	15
2-1827827-1	15
2-1827827-2	15
2-1827827-3	15
2-1827827-4	15
1827928-1	42
1857118-1	13
1857258-1	44
1857346-1	45
1857353-1	17
1857353-2	17
1857724-4	30
1871250-3	25
1871250-4	25
1-1871274-0	14
1-1871274-2	14
1-1871274-6	14
2-1871274-0	14

Part Number	Page
2-1871274-2	14
2-1871274-4	14
2-1871274-8	14
3-1871274-0	14
4-1871274-0	14
4-1871274-6	14
5-1871274-0	14
5-1871274-4	14
5-1871274-6	14
6-1871274-0	14
7-1871274-0	14
8-1871274-0	14
1-1871275-0	14
1-1871275-2	14
1-1871275-6	14
2-1871275-0	14
2-1871275-2	14
2-1871275-4	14
2-1871275-8	14
3-1871275-0	14
4-1871275-0	14
4-1871275-6	14
5-1871275-0	14
5-1871275-4	14
5-1871275-6	14
6-1871275-0	14
7-1871275-0	14
8-1871275-0	14
1871406-1	10
1-1871566-0	14
1-1871566-2	14
1-1871566-6	14
2-1871566-0	14
2-1871566-2	14
2-1871566-4	14
2-1871566-8	14
3-1871566-0	14
4-1871566-0	14
4-1871566-6	14
5-1871566-0	14
5-1871566-4	14
5-1871566-6	14
6-1871566-0	14
7-1871566-0	14
8-1871566-0	14
1871583-1	25
1871583-2	25
1871583-3	25

Part Number	Page
1871583-4	25
1871602-1	25, 26
1871602-2	25, 26
1871813-1	42
1871916-1	25
1903290-1	28
1903302-1	25
1939053-1	20
1939054-1	20
1981568-1	20
1981584-1	20
1981812-1	47
1981813-1	47
1981898-1	11
5338979-1	21
5338979-2	21
5338980-1	21
5338982-1	21
5338982-2	21
6337194-1	40

Engineering Notes

All specifications subject to change. Consult Tyco Electronics for latest specifications.

Tyco Electronics

Global Contacts

Americas

Argentina – Buenos Aires
Phone: +54-11-4733-2200
Fax: +54-11-4733-2211

Brasil – São Paulo
Phone: +55-11-3611-1311
Fax: +55-11-3611-0397

Canada – Toronto
Phone: +905-475-6222
Fax: +905-474-5520
Product Information Center:
Phone: +905-470-4425
Fax: +905-474-5525

Colombia – Bogota
Phone: +57-1-231-9398
Fax: +57-1-660-0206

Mexico – Mexico City
Phone: +52-55-1106-0800
+01-800-733-8926
Fax: +52-55-1106-0901

For Latin/South American Countries not shown
Phone: +54-11-4733-2015
Fax: +54-11-4733-2083

United States
Harrisburg, PA
Phone: +1-717-564-0100
Fax: +1-717-986-7575
Product Information Center:
Phone: +1-800-522-6752
Fax: +1-717-986-7575

Troy, MI
Phone: +1-248-273-3359
Fax: +1-248-273-3322

Asia/Pacific

Australia – Sydney
Phone: +61-2-9554-2600
Fax: +61-2-9502-2556
Product Information Center:
Phone: +61-2-9840-8200
Fax: +61-2-9634-6188

India – Bangalore
Phone: +91-80-285-40800
Fax: +91-80-285-40820

Indonesia – Jakarta
Phone: +65-6482-0311
Fax: +65-6482-1012

Japan – Kawasaki, Kanagawa
Phone: +81-44-844-8111
Fax: +81-44-812-3207
Product Information Center:
Phone: +81-44-844-8013
Fax: +81-44-812-3200

Korea – Seoul
Phone: +82-2-3415-4500
Fax: +82-2-3486-3810

Malaysia – Selangor
Phone: +60-3-7805-3055
Fax: +60-3-7805-3066

New Zealand – Auckland
Phone: +64-9-634-4580
Fax: +64-9-634-4586

Philippines – Makati City
Phone: +632-848-0171
Fax: +632-867-8661

People's Republic of China
Hong Kong
Phone: +852-2735-1628
Fax: +852-2735-0243

Shanghai
Phone: +86-21-2407-1588
Fax: +86-21-2407-1599

Singapore – Singapore
Phone: +65-6482-0311
Fax: +65-6482-1012

Taiwan – Taipei
Phone: +886-2-8768-2788
Fax: +886-2-8768-2268

Thailand – Bangkok
Phone: +66-2-955-0500
Fax: +66-2-955-0505

Vietnam – Ho Chi Minh City
Phone: +84-8-930-5546
Fax: +84-8-930-3443

Europe/Middle East/Africa

Austria – Vienna
Phone: +43-1-905-60-0
Fax: +43-1-905-60-1333
Product Information Center:
Phone: +43-1-905-60-1249
Fax: +43-1-905-60-1251

Belgium – Kessel-Lo
Phone: +32-16-352-300
Fax: +32-16-352-352

Bulgaria – Sofia
Phone: +359-2-971-2152
Fax: +359-2-971-2153

Czech Republic and Slovakia
Czech Republic – Kurim
Phone: +420-541-162-111
Fax: +420-541-162-223
Product Information Center:
Phone: +420-541-162-113
Fax: +420-541-162-132

Denmark – Glostrup
Phone: +45-43-48-04-00
Fax: +45-43-44-14-14

Egypt – Cairo
Phone: +202-419-2334
Fax: +202-417-7647

Estonia – Tartu
Phone: +372-5138-274
Fax: +372-7400-779

Finland – Helsinki
Phone: +358-95-12-34-20
Fax: +358-95-12-34-250

France – Cergy-Pontoise Cedex
Phone: +33-1-3420-8888
Fax: +33-1-3420-8600
Product Information Center:
Phone: +33-1-3420-8686
Fax: +33-1-3420-8623

France Export Divisions –
Cergy-Pontoise Cedex
Phone: +33-1-3420-8808
Fax: +33-1-3420-8300

Germany – Bensheim
Phone: +49-6251-133-0
Fax: +49-6251-133-1600
Product Information Center:
Phone: +49-6251-133-1999
Fax: +49-6251-133-1988

Greece – Athens
Phone: +30-210-9370-396/397
Fax: +30-210-9370-655

Hungary – Budapest
Phone: +36-1-289-1000
Fax: +36-1-289-1010
Product Information Center:
Phone: +36-1-289-1016
Fax: +36-1-289-1017

Ireland – Dublin
Phone: +353-1-866-5612
Fax: +353-1-866-5714

Israel – Petach-Tikva
Phone: +972-3-929-0999
Fax: +972-3-919-1088

Italy – Collegno (Torino)
Phone: +39-011-4012-111
Fax: +39-011-4031-116
Product Information Center:
Phone: +39-011-4012-428
Fax: +39-011-40-287-428

Lithuania and Latvia
Lithuania – Vilnius
Phone: +370-5-213-1402
Fax: +370-5-213-1403
Product Information Center:
Phone: +370-5-211-3016
Fax: +370-5-213-1403

Netherlands – 's-Hertogenbosch
Phone: +31-73-6246-246
Fax: +31-73-6212-365
Product Information Center:
Phone: +31-73-6246-999
Fax: +31-73-6246-998

Norway – Nesbru
Phone: +47-66-77-88-50
Fax: +47-66-77-88-55

Poland – Warsaw
Phone: +48-22-4576-700
Fax: +48-22-4576-720
Product Information Center:
Phone: +48-22-4576-704
Fax: +48-22-4576-720

Romania – Bucharest
Phone: +40-21-311-3479/3596
Fax: +40-21-312-0574

Russia – Moscow
Phone: +7-495-790-7902
Fax: +7-495-721-1893
Product Information Center:
Phone: +7-495-790-7902-502
Fax: +7-495-721-1893

Russia – St. Petersburg
Phone: +7-812-718-8192
Fax: +7-812-718-8193

Slovenia – Ljubljana
Phone: +386-1561-3270
Fax: +386-1561-3240

South Africa – Port Elizabeth
Phone: +27-41-503-4500
Fax: +27-41-581-0440

Spain – Barcelona
Phone: +34-93-291-0330
Fax: +34-93-201-7879

Sweden – Upplands Väsby
Phone: +46-8-50-72-50-00
Fax: +46-8-50-72-50-01

Switzerland – Steinach
Phone: +41-71-447-0447
Fax: +41-71-447-0444

Turkey – Istanbul
Phone: +90-212-281-8181-83
+90-212-282-5130/5430
Fax: +90-212-281-8184

Ukraine – Kiev
Phone: +380-44-206-2265
Fax: +380-44-206-2264
Product Information Center:
Phone: +380-44-206-2265
Fax: +380-44-206-2264

United Kingdom –
Stanmore, Middlesex
Phone: +44-8706-080208
Fax: +44-208-954-6234
Product Information Center:
Freephone (UK only):
0800-267-666
Phone: +44-8706-080208
Fax: +44-208-420-8095

Tyco Electronics AMP GmbH
AMPèrestr. 12–14
64625 Bensheim / Germany
Phone: +49-(0)6251-133-0
Fax: +49-(0)6251-133-1600

www.tycoelectronics.com
AMP, ELASTIBOOT, KAPTON, LAMFRAME, M/A-COM, RAYCHEM, STAX, TE Logo and Tyco Electronics are trademarks

© 2007 Tyco Electronics Ltd.
1654270-2 Revised 8-2007 5M ST