WIREWOUND ANTI-SURGE RESISTORS

TYPE EP SERIES

INTRODUCTION

TE Connectivity (TE) is pleased to offer this wire wound axial leaded resistor. Robustly manufactured with high quality materials this resistor offers flame proof coating and is designed and tested to withstand power surges of up to 12KV. In line with our commitment to increasing power to size ratio we are now also able to offer this series in extra-small size.

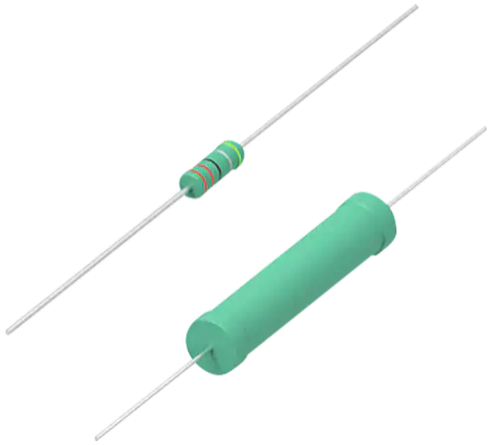

FEATURES

- Power up to 10W in Extra Small Size
- 22 Size/Power Options
- Specially Designed and Tested for Surge Immunity
- RoHS Compliant with no exemptions

CHARACTERISTICS – ELECTRICAL

Size	Type	Rated Power at 70° C	Maximum Working Voltage	Maximum Overload Voltage	Dielectric Withstanding Voltage	Resistance Range	Operating Temperature Range
Normal size	EP05W	1/2W (0.50W)	500 V	1,000 V	350 V	10Ω – 560Ω	-55°C ~ +155°C
	EP1W	1W	500 V	1,000 V	500 V	10Ω– 1KΩ	
	EP2W	2W	500 V	1,000 V	500 V	10Ω – 2KΩ	
	EP3W	3W	500 V	1,000 V	500 V	10Ω – 3KΩ	
	EP5W	5W	500 V	1,000 V	500 V	10Ω – 5KΩ	
	EP7W	7W	500 V	1,000 V	500 V	10Ω – 6KΩ	
	EP8W	8W	500 V	1,000 V	500 V	10Ω – 10KΩ	
	EP9W	9W	500 V	1,000 V	500 V	10Ω – 15KΩ	

CHARACTERISTICS – ELECTRICAL

Size	Type	Rated Power at 70° C	Maximum Working Voltage	Maximum Overload Voltage	Dielectric Withstanding Voltage	Resistance Range	Operating Temperature Range
Small size	EP1WS	1W	500 V	1,000 V	350 V	10Ω – 560Ω	-55°C to +155°C
	EP2WS	2W	500 V	1,000 V	500 V	10Ω – 1KΩ	
	EP3WS	3W	500 V	1,000 V	500 V	10Ω – 2KΩ	
	EP5WS	5W	500 V	1,000 V	500 V	10Ω – 3KΩ	
	EP7WS	7W	500 V	1,000 V	500 V	10Ω – 5KΩ	
	EP8WS	8W	500 V	1,000 V	500 V	10Ω – 6KΩ	
	EP9WS	9W	500 V	1,000 V	500 V	10Ω – 10KΩ	
	EP10WS	10W	500 V	1,000 V	500 V	10Ω – 15KΩ	
Extra small size	EP1WSSS	1W	500 V	1,000 V	350 V	1Ω – 560Ω	-55°C to +155°C
	EP1WSS	1W	500 V	1,000 V	350 V	1Ω – 750Ω	
	EP2WSS	2W	500 V	1,000 V	350 V	1Ω – 910Ω	
	EP3WSS	3W	500 V	1,000 V	500 V	1Ω – 2.2KΩ	
	EP4WSS	4W	500 V	1,000 V	500 V	1Ω – 2.2KΩ	
	EP10WSS	10W	500 V	1,000 V	500 V	1Ω – 10KΩ	

*Maximum working voltage: 500V

Maximum overload voltage: 1,000V

Dielectric withstanding voltage: Dimension: ≤3.5x10 : 350V

>3.5x10 : 500V

Voltage rating:

Resistor shall have a rated Directed-Current (DC) continuous working voltage or an appropriate sine-wave root-mean-square (RMS) alternating-current (AC) Continuous working voltage at commercial line frequency and waveform corresponding to the power rating, as determined from the following formula:

$$RCWV = \sqrt{PxR}$$

Note:

Maximum Working Voltage or $\sqrt{(PxR)}$ whichever is lesser.

Maximum Overload Voltage or $2.5\sqrt{(PxR)}$ whichever is lesser.

Were:

RCWV = Rated DC are RMS AC continuous working voltage at commercial-line frequency and waveform (Volt)

P = Power Rating (watt)

R = Nominal Resistance (ohm)

In no case shall the rated DC or RMS AC continuous working voltage be greater than the applicable maximum value

DERATING CURVE

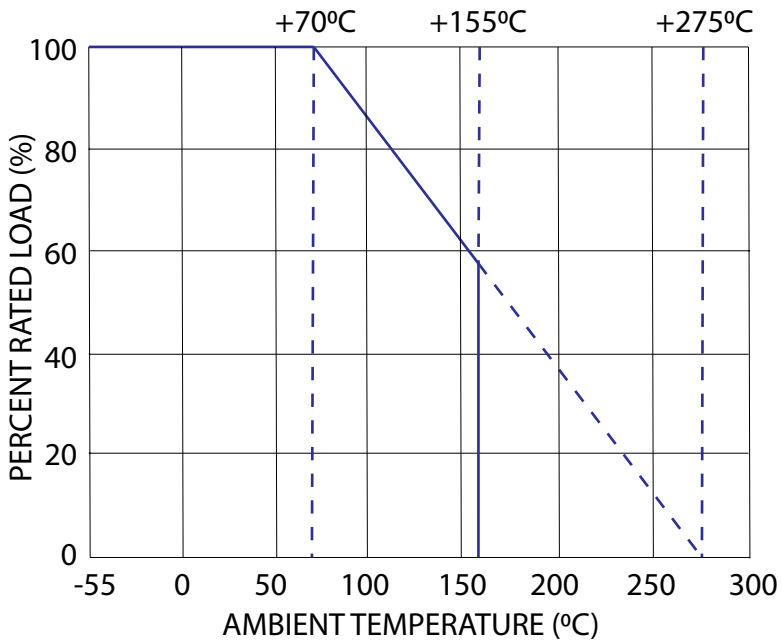

For resistors operated in ambient temperatures above 70°C, power rating must be derated in accordance with this curve.

SURGE RATING

Type	Low Resistance Range	Maximum Surge Voltage	Medium Resistance Range	Maximum Surge Voltage	High Resistance Range	Maximum Surge Voltage
EP05W	10Ω – 40Ω	3KV	43Ω – 240Ω	4KV	270Ω – 560Ω	4KV
EP1W	10Ω – 50Ω	4KV	51Ω – 240 Ω	5KV	270Ω – 1kΩ	5KV
EP2W	10Ω – 100Ω	5KV	110Ω – 240Ω	6KV	270Ω – 2kΩ	6KV
EP3W	10Ω – 100Ω	7KV	110Ω – 680Ω	8KV	750Ω – 3kΩ	8KV
EP5W	10Ω – 160Ω	8KV	180Ω – 680Ω	9KV	750Ω – 5kΩ	9KV
EP7W	10Ω – 160Ω	9KV	180Ω – 680Ω	10KV	750Ω – 6kΩ	10KV
EP8W	10Ω – 160Ω	10KV	180Ω – 680Ω	11KV	750Ω – 10kΩ	11KV
EP9W	10Ω – 160Ω	10KV	180Ω – 680Ω	11KV	750Ω – 15kΩ	12KV
Small Size						
EP1WS	10Ω – 40Ω	3KV	43Ω – 240Ω	4KV	270Ω – 560Ω	4KV
EP2WS	10Ω – 50Ω	4KV	51Ω – 240 Ω	5KV	270Ω – 1kΩ	5KV
EP3WS	10Ω – 100Ω	5KV	110Ω – 240Ω	6KV	270Ω – 2kΩ	6KV
EP5WS	10Ω – 100Ω	7KV	110Ω – 680Ω	8KV	750Ω – 3kΩ	8KV
EP7WS	10Ω – 160Ω	8KV	180Ω – 680Ω	9KV	750Ω – 5kΩ	9KV
EP8WS	10Ω – 160Ω	9KV	180Ω – 680Ω	10KV	750Ω – 6kΩ	10KV
EP9WS	10Ω – 160Ω	10KV	180Ω – 680Ω	11KV	750Ω – 10kΩ	11KV
EP10WS	10Ω – 160Ω	10KV	180Ω – 680Ω	11KV	750Ω – 15kΩ	12KV

SURGE RATING

Type	Low Resistance Range	Maximum Surge Voltage	Medium Resistance Range	Maximum Surge Voltage	High Resistance Range	Maximum Surge Voltage
Extra Small Size						
EP1WSSS	1Ω – 40Ω	1.5KV	43Ω – 240Ω	2KV	270Ω – 560Ω	2.5KV
EP1WSS	1Ω – 40Ω	1.8KV	43Ω – 240Ω	3KV	270Ω – 750Ω	4KV
EP2WSS	1Ω – 40Ω	2KV	43Ω – 240Ω	3KV	270Ω – 910Ω	4KV
EP3WSS	1Ω – 100Ω	3KV	110Ω – 240Ω	4KV	270Ω – 2k2Ω	5KV
EP4WSS	1Ω – 100Ω	4KV	110Ω – 240Ω	5KV	270Ω – 2k2Ω	6KV
EP10WSS	1Ω – 160Ω	9KV	180Ω – 680Ω	10KV	750Ω – 10kΩ	10KV

Surge Waveform (1.2 /50 µs)

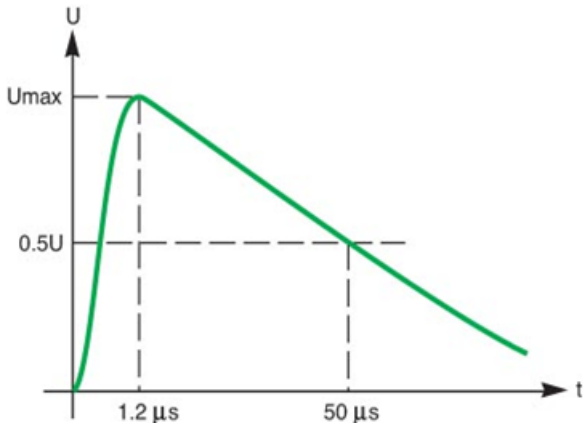

1.2 / 50 µs Voltage Capability

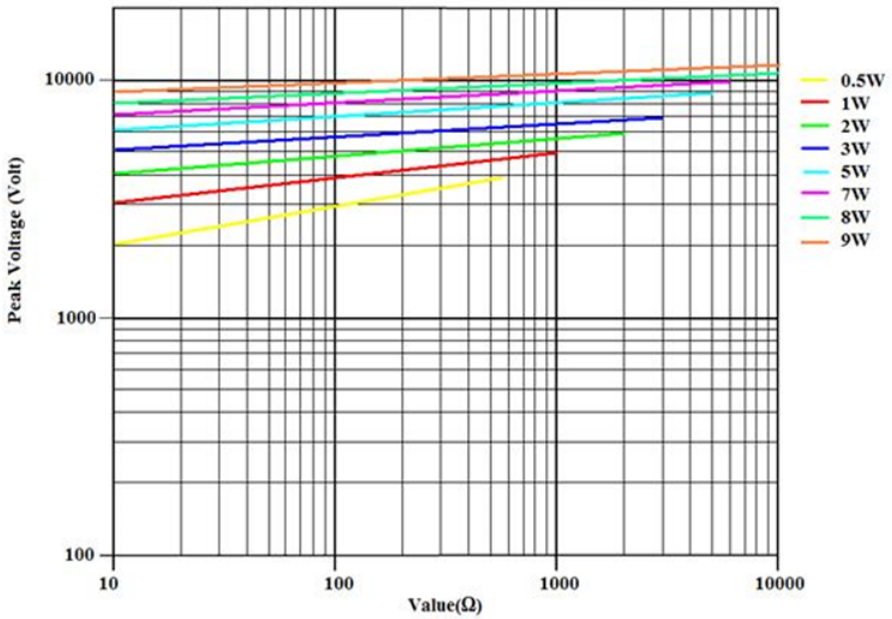

CONSTRUCTION

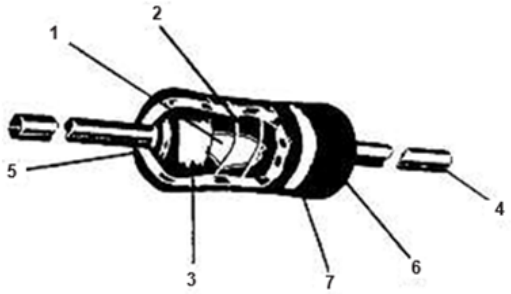

No.	Name	Material
1	Basic Body	Rod Type Ceramics
2	Resistance Wire	Resistance Wire Alloy
3	End Cap	Steel (Tin plated iron surface)
4	Lead Wire	Annealed copper wire coated with tin
5	Joint	By welding
6	Coating	Insulated & Non-Flame paint (colour: Light Green)
7	Colour Code	Non-Flame epoxy resin

DIMENSIONS AND RESISTANCE RANGE

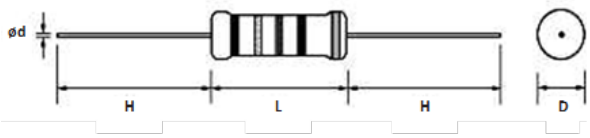

Type	Power Rating at 70 °C	Dimensions (mm)			
		D ± 1	L ± 1	d ± 0.05	H ± 3
EP05W	1/2W (0.50W)	3.5	10.0	0.54	28
EP1W	1W	5.0	12.0	0.70	28
EP2W	2W	5.5	16.0	0.70	28
EP3W	3W	6.5	17.5	0.75	28
EP5W	5W	8.5	25.0	0.75	38
EP7W	7W	8.5	30.0	0.75	38
EP8W	8W	8.5	40.0	0.75	38
EP9W	9W	8.5	53.0	0.75	38
EP1WS	1W-S	3.5	10.0	0.54	28
EP2WS	2W-S	5.0	12.0	0.70	28
EP3WS	3W-S	5.5	16.0	0.70	28
EP5WS	5W-S	6.5	17.5	0.75	28
EP7WS	7W-S	8.5	25.0	0.75	38
EP8WS	8W-S	8.5	30.0	0.75	38
EP9WS	9W-S	8.5	40.0	0.75	38
EP10WS	10W-S	8.5	53.0	0.75	38
EP1WSSS	1W-SSS	2.5	6.8	0.54	28
EP1WSS	1W-SS	3.0	9.0	0.54	28
EP2WSS	2W-SS	3.5	10.0	0.54	28
EP3WSS	3W-SS	5.5	13.5	0.70	28
EP4WSS	4W-SS	5.5	16.0	0.70	28
EP10WSS	10W-SS	8.5	40.0	0.75	38

PERFORMANCE SPECIFICATION

Characteristics	Limits	Test Methods (JIS C 5201-1)
DC. resistance	Must be within the specified tolerance	The limit of error of measuring apparatus shall not exceed allowable range or 5% of resistance tolerance. (Sub-clause 4.5)
Temperature coefficient	<20Ω : ± 400 PPM/°C ≥20Ω : ± 300PPM/°C	Natural resistance change per temperature degree centigrade. $\frac{R2-R1}{R1(t2-t1)} \times 10^6$ (PPM/°C) R1: Resistance value at room temperature (t1) R2: Resistance value at room temperature plus 100°C (t2) (Sub-clause 4.8)
Short time overload	Resistance change rate is ± (2% + 0.05Ω) Maximum with no evidence of mechanical damage	Permanent resistance change after application of a potential of 2.5 times RCWV for 5 seconds. (Sub-clause 4.13)
Terminal Strength	No evidence of mechanical damage	Direct load: Resistance to a 2.5 kgs direct load for 10 secs. In the direction of the axis of the terminal leads Twist test: Terminal leads shall be bent through 90°at a point of about 6mm from the body of the resistor and shall be rotated through 360°about the original axis of the bent terminal in alternating direction for a total of3 rotations (Sub-clause 4.16)
Solderability	95% coverage Minimum	The area covered with a new, smooth, clean, shiny and continuous surface free from concentrated pinholes. Test temperature of solder 245 °C ± 3 °C Dwell time in solder : 2 ~ 3 seconds (Sub-clause 4.17)
Soldering temperature reference	Electrical characteristics shall be satisfied. Without distinct deformation in appearance. (95% coverage Minimum)	The leads immersed into solder bath to 3.2 to 4.8 mm. from the body. Permanent resistance change shall be checked. Wave soldering conditions: (2 cycles Maximum) Pre-heat : 100 ~ 120°C, 30 ± 5 sec. Suggestion solder temperature: 235 ~ 255 °C, 10 sec. (Maximum) Peak temperature: 260 °C Hand soldering condition: Hand soldering bit temperature: 380 °C ± 10°C Dwell time in solder : 3 +1/-0 sec.
Resistance to soldering heat	Resistance change rate is ± (1% + 0.05Ω) Maximum with no evidence of mechanical damage.	Permanent resistance change when leads immersed to 3.2 to 4.8 mm from the body in 350°C ± 10°C solder for 3 ± 0.5 seconds. (Sub-clause 4.18)
Temperature cycling	Resistance change rate is ± (2% + 0.05Ω) Maximum with no evidence of mechanical damage	Resistance change after continuous 100 cycles for duty shown below:

Step	Temperature	Time
1	-55°C ± 3°C	30 mins
2	Room temperature	10~15 mins
3	+155°C ± 2°C	30mins
4	Room temperature	10~15 mins

(Sub-clause 4.19)

Vibration	Resistance change rate is ± (1% + 0.05Ω) Max.	55Hz, 3 planes 2hrs each Total amplitude = 1.5mm (Sub-clause 4.22)

Characteristics	Limits	Test Methods (JIS C 5201-1)	
Load life in humidity	Resistance change rate is ±(5% + 0.05Ω) Maximum with no evidence of mechanical damage	Resistance change after 1000 hrs (1.5 hrs “on”, 0.5 hr “off”) at RCWV in a humidity test chamber controlled at 40°C ± 2°C and 90 to 95% relative humidity (Sub-clause 4.24.2.1)	
Load life	Resistance change rate is ±(5% + 0.05Ω) Maximum with no evidence of mechanical damage	Permanent resistance change after 1000 hrs operating at RCWV with duty cycle of (1.5 hours "on", 0.5 hour "off") at 70°C ± 2°C ambient (Sub-clause 4.25.1)	
Resistance to solvent	No deterioration of protective coatings and markings	Specimens shall be immersed in a bath of Isopropyl alcohol completely for 3 minutes with ultrasonic (Sub-clause 4.30)	
Surge immunity test (Resistor stand alone-Not sync to phase angle and polarity)	Resistance change rate is ±(5% + 0.05Ω) Maximum	Refer to IEC61000-4-5 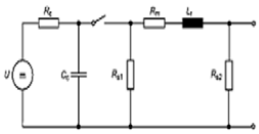 1.2µsec rising time and 50µsec discharge; 10 cycles every 1 minute	Max Surge Voltage Refer to surge rating chart.

PAINTING METHOD

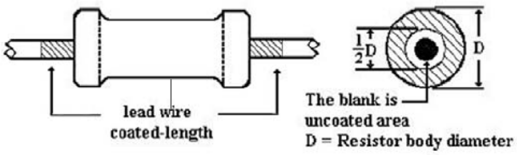

Welding point, terminal, and lead wire is permissible to be exposed without the outer coated cover. The extent should be within ½ of the angle.

MARKING

For EP Normal Size 1/2W, 1W, 2W, 3W and EP Small Size 1WS, 2WS, 3WS, 5WS and EP Extra Small Size 1WSSS, 1WSS, 2WSS, 3WSS. Resistors shall be marked with colour coding in accordance with JIS C 0802.

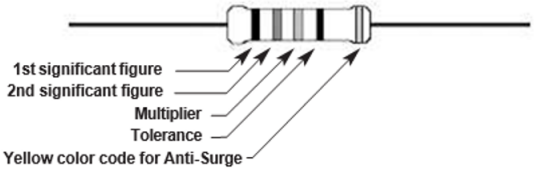

For EP Normal Size 5W, 7W, 8W 9W and EP Small Size 7WS, 8WS, 9WS, 10WS and EP Extra Small Size 10WSS. Resistors will be marked with:

1.Power Rating,

2. Nominal Resistance

3. Resistance Tolerance Code.

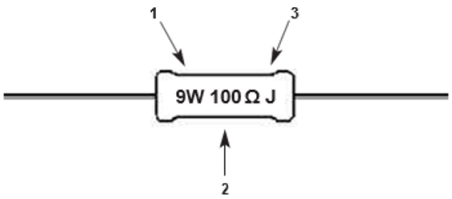

LABEL

Label shall be marked with the following items:

1. Type and style
2. Resistance Tolerance
3. Nominal Resistance
4. Quantity
5. PPM
6. Lot Number

Example:

TYCO Pn	2176082-7		
DESC	EP 3W (S)	± 5%	100R
QTY	1,000	Pcs.	PPM: 300
LOT	SAMPLE		
REF	RoHS 2011/65/EU		

PACKAGING

TAPE DIMENSIONS (mm)

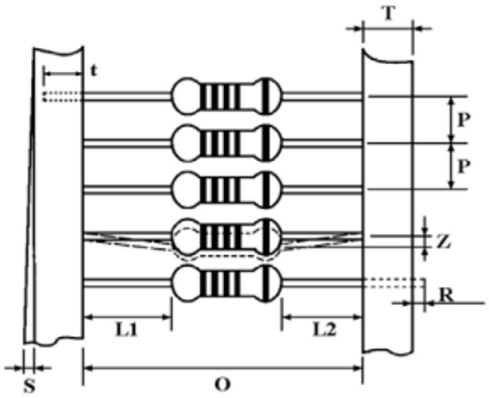

	Style	O ± 1	P	L1-L2 Maximum	T ± 1	Z Maximum	R	T ± 1	S Maximum
EP05W	PT-52	52	5± 0.3	1	6	1	0	4	0.5
EP1W	PT-52	52	5± 0.3	1	6	1	0	4	0.5
EP2W	PT-64	64	10± 0.5	1	6	1	0	5	0.5
EP3W	PT-64	64	10± 0.5	1	6	1	0	6	0.5
Small Size									
EP1WS	PT-52	52	5± 0.3	1	6	1	0	4	0.5
EP2WS	PT-52	52	5± 0.3	1	6	1	0	4	0.5
EP3WS	PT-64	64	10± 0.5	1	6	1	0	5	0.5
EP5WS	PT-64	64	10± 0.5	1	6	1	0	6	0.5
Extra Small Size									
EP1WSSS	PT-52	52	5± 0.3	1	6	1	0	4	0.5
EP1WSS	PT-52	52	5± 0.3	1	6	1	0	4	0.5
EP2WSS	PT-52	52	5± 0.5	1	6	1	0	4	0.5
EP3WSS	PT-64	64	10± 0.5	1	6	1	0	5	0.5
EP4WSS	PT-64	64	10± 0.5	1	6	1	0	6	0.5

TAPE IN BOX PACKAGING (mm)

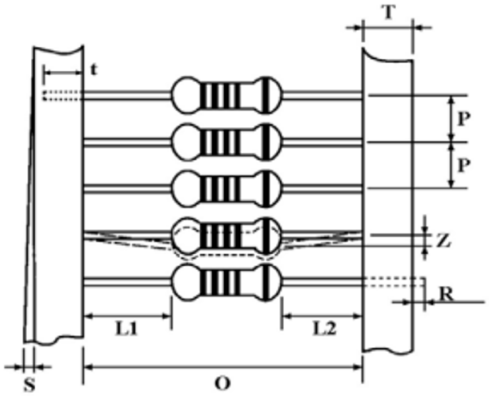

	Style	O ± 1	P	L1-L2 Maximum	T ± 1	Z Maximum	R	T ± 1	S Maximum
EP05W	PT-52	52	5± 0.3	1	6	1	0	4	0.5
EP1W	PT-52	52	5± 0.3	1	6	1	0	4	0.5
EP2W	PT-64	64	10± 0.5	1	6	1	0	5	0.5
EP3W	PT-64	64	10± 0.5	1	6	1	0	6	0.5
Small Size									
EP1WS	PT-52	52	5± 0.3	1	6	1	0	4	0.5
EP2WS	PT-52	52	5± 0.3	1	6	1	0	4	0.5
EP3WS	PT-64	64	10± 0.5	1	6	1	0	5	0.5
EP5WS	PT-64	64	10± 0.5	1	6	1	0	6	0.5
Extra Small Size									
EP1WSSS	PT-52	52	5± 0.3	1	6	1	0	4	0.5
EP1WSS	PT-52	52	5± 0.3	1	6	1	0	4	0.5
EP2WSS	PT-52	52	5± 0.5	1	6	1	0	4	0.5
EP3WSS	PT-64	64	10± 0.5	1	6	1	0	5	0.5
EP4WSS	PT-64	64	10± 0.5	1	6	1	0	6	0.5

TAPE IN BOX PACKAGING (mm)

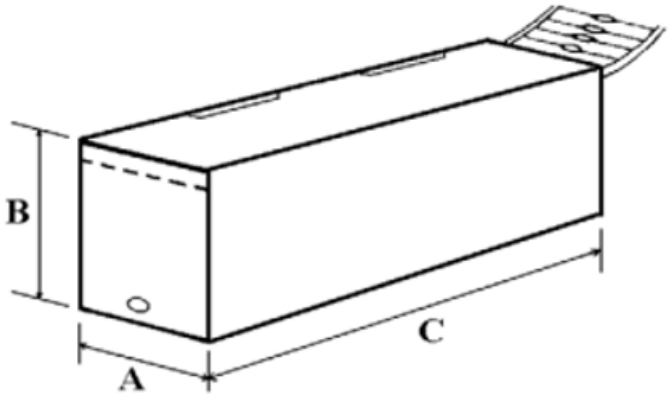

	Style	C ± 5	A ± 5	B ± 5	Quantity Per Box (pcs.)
EP05W	PT-52	260	85	70	1000
EP1W	PT-52	262	86	80	1000
EP2W	PT-64	262	92	108	1000
EP3W	PT-64	256	92	80	500
Small Size					
EP1WS	PT-52	260	85	70	1000
EP2WS	PT-52	262	86	80	1000
EP3WS	PT-64	262	92	108	1000
EP5WS	PT-64	256	92	80	500
Extra Small Size					
EP1WSSS	PT-52	260	85	70	1000
EP1WSS	PT-52	260	85	70	1000
EP2WSS	PT-52	262	86	80	1000
EP3WSS	PT-64	262	86	80	1000
EP4WSS	PT-64	262	86	80	1000

TAPE ON REEL PACKAGING (mm)

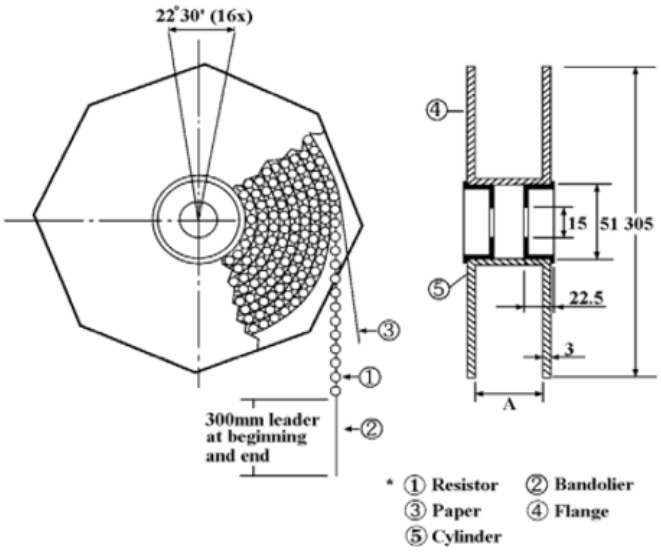

	Style	A (Across Flanges)	Quantity Per Reel
EP05W	PT-52	73 ± 2	2500
EP1W	PT-52	73 ± 2	2500
EP2W	PT-64	81 ± 5	1000
EP3W	PT-64	81 ± 5	500
Small Size			
EP1WS	PT-52	73 ± 2	2500
EP2WS	PT-52	73 ± 2	2500
EP3WS	PT-64	81 ± 5	1000
EP5WS	PT-64	81 ± 5	500
Extra Small Size			
EP1WSSS	PT-52	73 ± 2	2500
EP1WSS	PT-52	73 ± 2	2500
EP2WSS	PT-52	73 ± 2	2500
EP3WSS	PT-64	81 ± 5	1000
EP4WSS	PT-64	81 ± 5	1000

BULK IN BOX (IN PLASTIC BAG) (mm)

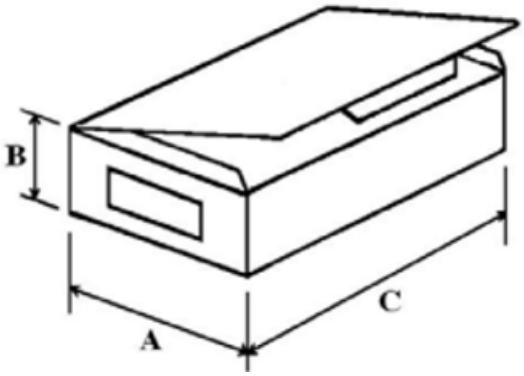

	Style	C ± 5	A ± 5	B ± 5
EP05W	155	95	53	100 / 1000
EP1W	155	95	53	100 / 500
EP2W	155	95	53	100 / 500
EP3W	155	95	53	100 / 400
Small Size				
EP1WS	155	95	53	100 / 1000
EP2WS	155	95	53	100 / 500
EP3WS	155	95	53	100 / 500
EP5WS	155	95	53	100 / 400
Extra Small Size				
EP1WSSS	155	95	53	100 / 1000
EP1WSS	155	95	53	100 / 1000
EP2WSS	155	95	53	100 / 1000
EP3WSS	155	95	53	100 / 1000
EP4WSS	155	95	53	100 / 500

BULK IN PLASTIC CASE PACKAGING (mm)

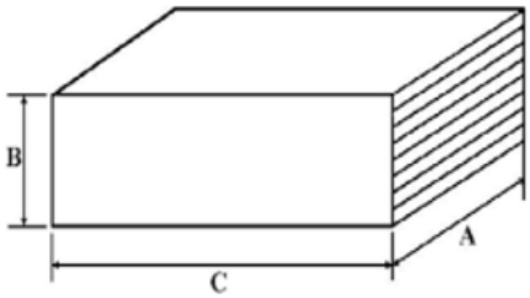

	C ± 5	A ± 5	B ± 5	Quantity Per Case/Box (pcs.)
EP5W	36	20	8	100 / 1000
Small Size				
EP7WS	36	20	8	100 / 1000

BULK IN INNER BOX PACKAGING (IN PLASTIC BAG) (mm)

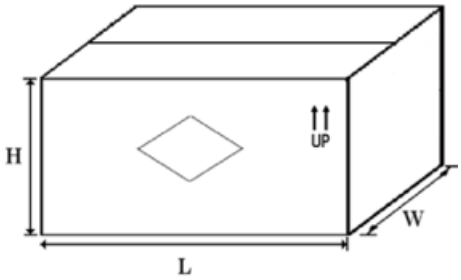

Carton Box`

	Quantity / Bag (pcs.)	Quantity Inner Box (pcs.)	Quantity Carton (pcs.)	Carton Box Size L x W x H (± 5)
EP7W	10	250	1000	520 x 220 x 250
EP8W	10	250	1000	520 x 220 x 250
EP9W	10	250	1000	520 x 220 x 250
Small Size				
EP8WS	10	250	1000	520 x 220 x 250
EP9WS	10	250	1000	520 x 220 x 250
EP10WS	10	250	1000	520 x 220 x 250
Extra Small Size				
EP10WSS	10	250	1000	215 x 520 x 250

ENVIRONMENTAL RELATED SUBSTANCE

This product complies to EU RoHS directive, EU PAHs directive, EU PFOS directive and halogen free.

Ozone layer depleting substances.

Ozone depleting substances are not used in our manufacturing process of this product.

This product is not manufactured using Chloro fluorocarbons (CFGs), Hydrochlorofluorocarbons (HCFCs), Hydrobromofluorocarbons (HBFCs) or other ozone depleting substances in any phase of the manufacturing process.

STORAGE CONDITIONS (MSL1)

The performance of these products, including the solderability, is guaranteed for a year from the date of arrival at your company, provided that they remain packed as they were when delivered and stored at a temperature of 25°C ± 10°C and a relative humidity of 60%RH ± 10%RH, chemical and dust free atmosphere.

Even within the above guarantee periods, do not store these products in the following conditions.

Otherwise, their electrical performance and/or solderability may be deteriorated, and the packaging materials (e.g. taping materials) may be deformed or deteriorated, resulting in mounting failures.

1. In salty air or in air with a high concentration of corrosive gas, suck as $C1_2$, H_2S, NH_3, SO_2, or NO_2
2. In direct sunlight

HOW TO ORDER

Part Number

EP 3W 200R J _

Common Part

EP

Power Rating

05W	1/2W
1W	1W
1WS	1W-S
1WSS	1W-SS
1WSSS	1W-SSS
As per Electrical Characteristics chart	

Nominal Resistance

10Ω	10R
1KΩ	1K0 (1000 Ω)

Packaging

-	Tape/Box
TR	Tape/Reel
BB	Bulk/Box

Resistance Tolerance

F	±1
G	±2
J	±5
K	±10

*Preferred range is E24 resistances at 5% Tolerance with Tape/Box packaging.

te.com

©2024 TE Connectivity Ltd. Family of Companies. All Rights Reserved.

TE Connectivity, TE connectivity (logo) and Every Connection Counts are trademarks owned or licensed by the TE Connectivity family of companies. All other logos, products and/or company names referred to herein might be trademarks of their respective owners.

While TE has made every reasonable effort to ensure the accuracy of the information in this document, TE does not guarantee that it is error-free, nor does TE make any other representation, warranty or guarantee that the information is accurate, correct, reliable or current. TE reserves the right to make any changes to the information contained herein without prior notice. TE Connectivity assumes only those obligations set forth in the terms and conditions for this product and shall in no event be liable for any incidental, indirect, or consequential damages arising out of the sale, resale, use, or misapplication of the product. TE expressly disclaims any implied warranties with respect to the information contained herein, including, but not limited to, implied warranties of merchantability or fitness for a particular purpose. Dimensions, specifications and/or information contained herein are for reference purposes only and are subject to change without notice. Consult TE for the latest dimensions, specifications and/or information. Users of TE Connectivity products must make their own assessment as to whether the respective product is suitable for the respective desired application.

02/24 9-1773463-6 ED